AGENDA
President and Board of Trustees
Village of Arlington Heights
Board Room

Arlington Heights Village Hall
33 S. Arlington Heights Road
Arlington Heights, IL 60005
February 17, 2026
7:30 PM

I. CALL TO ORDER

II. PLEDGE OF ALLEGIANCE

III. ROLL CALL OF MEMBERS

IV. APPROVAL OF MINUTES

A. 2/2/26 Meeting Minutes

V. APPROVAL OF ACCOUNTS PAYABLE

A. 2/15/26 Warrant Register

VI. RECOGNITIONS AND COMMUNICATIONS

A. 2025 Cultural Arts Award to Tamaron Conseur

B. Stranger Things Recognition

C. Police Promotions

VII. PUBLIC HEARINGS

VIII. CITIZENS TO BE HEARD

Anyone wishing to speak on a subject not on the Agenda should fill out a card, located in the back of the room, and hand it to the Village Clerk. Please limit your comments to three minutes.

IX. CONSENT AGENDA

This Agenda consists of proposals and recommendations that, in the opinion of the Village Manager, will be acceptable to all members of the Board of Trustees. The purpose of this Agenda is to save time by taking only one roll call vote instead of separate votes on each item. Consideration of this Consent Agenda will be governed by the following rules and procedures prior to roll call vote:

1. Any Trustee who wishes to vote "no" or "pass" on any Consent Agenda items should so indicate.

2. Upon the request of any one Trustee, any item will be removed from the Consent Agenda and considered separately after adoption of the Consent Agenda.

3. Citizens in the audience may request that the Board remove any item from this Consent Agenda for separate consideration after adoption of the Consent Agenda.

4. One roll call vote will be taken and will cover all remaining Consent Agenda items.

A. Adoption of an Ordinance Amending Chapter 13 of the Village Code to Increase the Number of Class E Liquor Licenses to 14, Decrease the Number of Class B Liquor Licenses to 33, and Decrease the Number of Class T Liquor Licenses to 26; and Recommendation that the Liquor Commissioner Issue One Class E License to KAWAII ASIAN AMERICAN CUISINE dba KAWAII ASIAN CUISINE Located at 60 S. Arlington Heights Road

B. Resolution Approving a Contract for Carpet Replacement and Installation at Village Hall, Second Floor

C. Resolution Approving the Final Plat of Subdivision for East Country Lane Townhomes 3310 N. Old Arlington Heights Rd.

D. Resolution Approving a Contract for Concrete Flatwork Extension

E. Resolution Approving the Renewal of Material Testing Services Contract

F. No Parking Ordinance along South Cedar Glen Drive 135 feet south of East Algonquin Road

X. NEW BUSINESS

A. 7 W. Dundee Rd. - Popeye's - Sign Variation - DC#25-091

XI. ADJOURNMENT

Persons with disabilities requiring auxiliary aids or services, such as an American Sign Language interpreter or written materials in accessible formats, should contact the Health & Human Services Department, at 33 S. Arlington Heights Road, Arlington Heights, IL 60005, healthmail@vah.com or 847/368-5760.

MINUTES
President and Board of Trustees
Village of Arlington Heights
Board Room

Arlington Heights Village Hall
33 S. Arlington Heights Road
Arlington Heights, IL 60005
February 2, 2026
7:30 PM

I. CALL TO ORDER

II. PLEDGE OF ALLEGIANCE

III. ROLL CALL OF MEMBERS

President Tinaglia and the following Trustees responded to roll: James Bertucci, Wendy Dunnington, Colin Gilbert, Robin LaBedz, Bill Manganaro, Carina Santa Maria, Tom Schwingbeck, Greg Zyck.
Also present were: Randy Recklaus, Chief Nick Pecora, Deputy Chief Greg Czernecki, Hart Passman, and Maggie Mattio.

IV. APPROVAL OF MINUTES

A. 1/20/26 Meeting Minutes

Trustee LaBedz moved to Approve. Trustee Santa Maria Seconded the Motion.
The Motion: Passed
Ayes: Trustee Bertucci, Trustee Dunnington, Trustee Gilbert, Trustee LaBedz, Trustee Manganaro, Trustee Santa Maria, Trustee Schwingbeck, President Tinaglia, Trustee Zyck
Nays: None
Abstain: None

B. 12/15/25 Closed Session Minutes

Trustee Bertucci moved to Continue. Trustee Manganaro Seconded the Motion.
The Motion: Passed
Ayes: Trustee Bertucci, Trustee Dunnington, Trustee Gilbert, Trustee LaBedz, Trustee Manganaro, Trustee Santa Maria, Trustee Schwingbeck, President Tinaglia, Trustee Zyck
Nays: None
Abstain: None

V. APPROVAL OF ACCOUNTS PAYABLE

A. 1/30/26 Warrant Register

Trustee Bertucci moved to Approve the Warrant Register dated January 30, 2026, in the amount of $2,239,801.88. Trustee Schwingbeck Seconded the Motion.
The Motion: Passed
Ayes: Trustee Bertucci, Trustee Dunnington, Trustee Gilbert, Trustee LaBedz, Trustee Manganaro, Trustee Santa Maria, Trustee Schwingbeck, President Tinaglia, Trustee Zyck
Nays: None
Abstain: None

VI. RECOGNITIONS AND COMMUNICATIONS

A. Arlington Heights Police Department CALEA Reaccreditation Award

Chief Pecora and Deputy Chief Greg Czernecki were honored to present the Mayor, Village Trustees, and the Arlington Heights Community with the Police Department's CALEA Reaccreditation Award. The Police Department voluntarily subjects itself to a four-year cycle wherein the CALEA Commission assesses community engagement, policies, procedures, equipment, and on-site assessments by trained experts. Only a small percentage, roughly 4%, of law enforcement agencies in the country have attained clear accreditation. The Police Department was first accredited in 2008, and after a final hearing, the Commission voted unanimously to award accreditation to the Police Department with advanced and meritorious status.

VII. PUBLIC HEARINGS

VIII. CITIZENS TO BE HEARD

Anyone wishing to speak on a subject not on the Agenda should fill out a card, located in the back of the room, and hand it to the Village Clerk. Please limit your comments to three minutes.

Resident Henry Beardsley suggested the Board commission a study on the potential increase in crime if video gaming terminals are permitted within the Village. He mentioned that video gaming establishments pose a risk of being burglarized, subject to paying for protection from organized gangs, illegal operations of gaming terminals, and a risk of higher crime rates in areas surrounding establishments operating video gaming terminals.

IX. CONSENT AGENDA

This Agenda consists of proposals and recommendations that, in the opinion of the Village Manager, will be acceptable to all members of the Board of Trustees. The purpose of this Agenda is to save time by taking only one roll call vote instead of separate votes on each item. Consideration of this Consent Agenda will be governed by the following rules and procedures prior to roll call vote:

1. Any Trustee who wishes to vote "no" or "pass" on any Consent Agenda items should so indicate.

2. Upon the request of any one Trustee, any item will be removed from the Consent Agenda and considered separately after adoption of the Consent Agenda.

3. Citizens in the audience may request that the Board remove any item from this Consent Agenda for separate consideration after adoption of the Consent Agenda.

4. One roll call vote will be taken and will cover all remaining Consent Agenda items.

Trustee LaBedz moved to Approve. Trustee Santa Maria Seconded the Motion.
The Motion: Passed
Ayes: Trustee Bertucci, Trustee Dunnington, Trustee Gilbert, Trustee LaBedz, Trustee Manganaro, Trustee Santa Maria, Trustee Schwingbeck, President Tinaglia, Trustee Zyck
Nays: None
Abstain: Trustee Schwingbeck abstained from voting on Item A — Bond Waiver for AHML Foundation

A. Bond Waiver-AHML Foundation

B. Reappointment of Jeff Hyslop to the Performing Arts Metropolis Board of Directors, term ending 9/16/2028

C. Bond Waiver—Children's Advocacy Center

D. Ordinance Approving Sign Variations for Arbor House at 25 E. Algonquin Rd.

2026-03

E. Resolution Approving Class 6b Renewal for Bristol North Ventura LLC at 3933 N. Ventura Drive

R2026-008

F. Resolution to Extend a Professional Services Agreement for Construction Inspection Services for 2026 Resurfacing Project

R2026-009
A2026-007

G. Resolution Approving a Final Balancing Change Order for the 2024 Tank #17 Rehabilitation Project

R2026-010

X. NEW BUSINESS

XI. ADJOURNMENT

Trustee Schwingbeck moved to Adjourn at 7:52PM. Trustee Gilbert Seconded the Motion.
The Motion: Passed
Ayes: Trustee Bertucci, Trustee Dunnington, Trustee Gilbert, Trustee LaBedz, Trustee Manganaro, Trustee Santa Maria, Trustee Schwingbeck, President Tinaglia, Trustee Zyck
Nays: None
Abstain: None

Persons with disabilities requiring auxiliary aids or services, such as an American Sign Language interpreter or written materials in accessible formats, should contact the Health & Human Services Department, at 33 S. Arlington Heights Road, Arlington Heights, IL 60005, healthmail@vah.com or 847/368-5760.

VILLAGE OF ARLINGTON HEIGHTS

WARRANT REGISTER FOR

CHECK DATE: 2/15/2026

Fund	Fund Description	Total Transaction Amount
101	GENERAL FUND	$854,330.02
215	CDBG FUND	$15,759.76
227	FOREIGN FIRE INS TAX FUND	$5,083.38
231	CRIMINAL INVESTIGATION FD	$4,160.06
235	MUNICIPAL PARKG OPR FUND	$3,716.64
263	TIF IV	$1,112.50
266	HICKORY KENSINGTON TIF	$2,212.50
301	DEBT SERVICE FUND	$318.00
401	CAPITAL PROJECTS FUND	$106,265.82
426	STORM WATER CONTROL FUND	$17,518.50
505	WATER AND SEWER FUND	$367,295.59
506	LEAD SERVICE LINE REPL FUND	$17,023.00
511	SOLID WASTE FUND SWANCC	$142,121.16
515	ARTS ENTERT & EVENTS FUND	$19,423.55
605	HEALTH INSURANCE FUND	$866,709.52
621	FLEET OPERATIONS FUND	$252,319.47
625	TECHNOLOGY FUND	$55,732.57
715	GUARANTY DEPOSITS FUND	$1,100.00
721	ESCROW DEPOSITS FUND	$5,000.00
	TOTAL ALL FUNDS	**$2,737,202.04**

VILLAGE OF ARLINGTON HEIGHTS

WARRANT REGISTER

CHECK DATE: 2/15/2026

	CHECK #	ACCOUNT #	VENDOR NAME/#	DESCRIPTION	AMOUNT	TOTAL AMOUNT
Department 0000	**NON DEPARTMENTAL**					
						$2,000.00
	315682	721-0000-231008-	ALOHA WATER	WATER METER DEPOSIT REFUND	$1,000.00	
	315682	721-0000-231008-	ALOHA WATER	WATER METER DEPOSIT REFUND	$1,000.00	
						$45.00
	315740	101-0000-481500-	FRONTIER DAYS INC	HEARTS OF GOLD TICKET REFUND	$45.00	
						$202.41
	315773	101-0000-489850-	MERCHANTS' CREDIT GUIDE CO.	COLLECTION FEES	$5.51	
	315773	101-0000-489850-	MERCHANTS' CREDIT GUIDE CO.	COLLECTION FEES	$196.90	
						$200.00
	315791	715-0000-220930-	Jeff Greenfield	BOND REFUND-REC-016855-2026	$200.00	
						$900.00
	315792	715-0000-220930-	Lake In The Hills Construction Co., Inc.	BOND REFUND-REC-016861-2026	$200.00	
	315792	715-0000-220930-	Lake In The Hills Construction Co., Inc.	BOND REFUND-REC-016861-2026	$200.00	
	315792	715-0000-220930-	Lake In The Hills Construction Co., Inc.	BOND REFUND-REC-016861-2026	$500.00	
						$176.70
	315793	505-0000-120250-	NEUBAUER, PAUL	WATER REFUND	$176.70	
						$3,000.00
	315806	721-0000-231008-	SAVATREE	WATER METER DEPOSIT REFUND	$1,000.00	
	315806	721-0000-231008-	SAVATREE	WATER METER DEPOSIT REFUND	$1,000.00	
	315806	721-0000-231008-	SAVATREE	WATER METER DEPOSIT REFUND	$1,000.00	
						$216.50
	315845	101-0000-411350-	WOOD DWAYNE J	REIMBURSEMENT	$216.50	
						($192.00)
	902772	605-0000-471230-	BLUE CROSS BLUE SHIELD OF ILLINOIS	MEDICAL/DENTAL 1/1-1/15	($192.00)	

VILLAGE OF ARLINGTON HEIGHTS

WARRANT REGISTER

CHECK DATE: 2/15/2026

CHECK #	ACCOUNT #	VENDOR NAME/#	DESCRIPTION	AMOUNT	TOTAL AMOUNT
					$573.00
902773	101-0000-210820-	SONTIQ	ID PROTECTION	$573.00	
					$6,931.73
902774	101-0000-211060-	VISION SERVICE PLAN	FEBRUARY VISION INSURANCE	$1,840.79	
902774	101-0000-211060-	VISION SERVICE PLAN	FEBRUARY VISION INSURANCE	$5,090.94	
					$5,707.37
902775	101-0000-210910-	EMPLOYEE BENEFITS CORP	HEALTH/DEPENDENT CARE FSA	$2,759.06	
902775	101-0000-210930-	EMPLOYEE BENEFITS CORP	HEALTH/DEPENDENT CARE FSA	$144.23	
902775	101-0000-210930-	EMPLOYEE BENEFITS CORP	HEALTH/DEPENDENT CARE FSA	$2,804.08	
					$1,579.50
902776	101-0000-211070-	METLIFE LEGAL PLANS, INC	LEGAL PLANS	$253.50	
902776	101-0000-211070-	METLIFE LEGAL PLANS, INC	LEGAL PLANS	$1,326.00	
					($9,000.84)
902778	511-0000-489900-	SOLID WASTE AGENCY	TIPPING FEES	($9,000.84)	
					$21,986.67
902779	101-0000-210910-	EMPLOYEE BENEFITS CORP	HEALTH/DEPENDENT CARE FSA	$10,000.00	
902779	101-0000-210910-	EMPLOYEE BENEFITS CORP	HEALTH/DEPENDENT CARE FSA	$11,842.44	
902779	101-0000-210930-	EMPLOYEE BENEFITS CORP	HEALTH/DEPENDENT CARE FSA	$144.23	
					$1,821.34
902781	605-0000-471100-	HANSELMAN, CURT	INSURANCE PREMIUMS REFUND	$1,821.34	
			DEPARTMENT 0000 TOTAL:	$36,147.38	

VILLAGE OF ARLINGTON HEIGHTS

WARRANT REGISTER

CHECK DATE: 2/15/2026

	CHECK #	ACCOUNT #	VENDOR NAME/#	DESCRIPTION	AMOUNT	TOTAL AMOUNT
Department 0101	**BOARD OF TRUSTEES ADMIN**					
						$318.00
	315701	101-0101-521650-	CAPTION FIRST INC	PROFESSIONAL SERVICES	$318.00	
						$54.00
	315753	101-0101-530010-	JOURNAL & TOPICS NEWSPAPERS	SUBSCRIPTION	$54.00	
						$4,500.00
	315765	101-0101-521650-	LORELLE COMMUNICATIONS INC	PROFESSIONAL SERVICES	$4,500.00	
						$39.39
	315837	101-0101-522700-	VERIZON WIRELESS	ACCT 88534852600001	$39.39	
				DEPARTMENT 0101 TOTAL:	$4,911.39	

VILLAGE OF ARLINGTON HEIGHTS

WARRANT REGISTER

CHECK DATE: 2/15/2026

	CHECK #	ACCOUNT #	VENDOR NAME/#	DESCRIPTION	AMOUNT	TOTAL AMOUNT
Department 0201	**INTEGRATED SERVICES ADMIN**					
	315690	101-0201-522700-	AT & T MOBILITY	ACCT 232106787838	$100.00	**$100.00**
	315705	101-0201-530010-	CHICAGO TRIBUNE	SUBSCRIPTION	$851.99	**$851.99**
	315738	101-0201-530050-	FASTSIGNS	PRINTING SERVICES	$70.00	**$70.00**
	315789	101-0201-530050-	ODP BUSINESS SOLUTIONS	OFFICE SUPPLIES	$25.09	**$25.09**
	315803	101-0201-522020-	ROTARY CLUB OF ARLINGTON HTS	DUES	$96.00	**$96.00**
	315837	101-0201-522700-	VERIZON WIRELESS	ACCT 88534852600001	$118.82	**$118.82**
	902780	101-0201-520100-	ELROD FRIEDMAN LLP	LEGAL SERVICES	$18,691.89	**$18,691.89**
				DEPARTMENT 0201 TOTAL:	$19,953.79	

VILLAGE OF ARLINGTON HEIGHTS

WARRANT REGISTER

CHECK DATE: 2/15/2026

	CHECK #	ACCOUNT #	VENDOR NAME/#	DESCRIPTION	AMOUNT	TOTAL AMOUNT
Department 0301	**HUMAN RESOURCES ADMIN**					
						$448.70
	315678	101-0301-530350-	BRANDING TOUCHPOINT / IPROMOTE U	CLOTHING & APPAREL	$448.70	
						$153.83
	315684	101-0301-530050-	AMAZON COM CAPITAL SERVICES	OFFICE SUPPLIES	$38.94	
	315684	101-0301-530050-	AMAZON COM CAPITAL SERVICES	OFFICE SUPPLIES	$114.89	
						$39.39
	315838	101-0301-522700-	VERIZON WIRELESS	ACCT 6133988359	$39.39	
						$487,327.75
	902772	605-0301-542750-	BLUE CROSS BLUE SHIELD OF ILLINOIS	MEDICAL/DENTAL 1/1-1/15	$457,777.35	
	902772	605-0301-542770-	BLUE CROSS BLUE SHIELD OF ILLINOIS	MEDICAL/DENTAL 1/1-1/15	$29,550.40	
						$377,752.43
	902777	605-0301-520600-	HMO ILLINOIS	HMO PREMIUMS FEB 2026	$377,752.43	
				DEPARTMENT 0301 TOTAL:	$865,722.10	

VILLAGE OF ARLINGTON HEIGHTS

WARRANT REGISTER

CHECK DATE: 2/15/2026

	CHECK #	ACCOUNT #	VENDOR NAME/#	DESCRIPTION	AMOUNT	TOTAL AMOUNT
Department 0501	**FINANCE ADMIN**					
						$143.78
	315684	101-0501-530050-	AMAZON COM CAPITAL SERVICES	OFFICE SUPPLIES	$12.96	
	315684	101-0501-530050-	AMAZON COM CAPITAL SERVICES	OFFICE SUPPLIES	$47.45	
	315684	101-0501-530050-	AMAZON COM CAPITAL SERVICES	OFFICE SUPPLIES	$83.37	
						$36.24
	315700	101-0501-522150-	CANON U.S.A. INC	OFFICE MACHINES & ACCESS	$36.24	
						$118.91
	315796	101-0501-530050-	PETTY CASH	KITCHEN SUPPLIES	$10.74	
	315796	101-0501-530050-	PETTY CASH	KITCHEN SUPPLIES	$103.94	
	315796	101-0501-530050-	PETTY CASH	OFFICE SUPPLIES	$4.23	
						$15,000.00
	315809	101-0501-520050-	SIKICH CPA LLC	PROFESSIONAL SERVICES	$15,000.00	
						$39.39
	315836	101-0501-522700-	VERIZON WIRELESS	ACCT 38508581800001	$39.39	
				DEPARTMENT 0501 TOTAL:	$15,338.32	

VILLAGE OF ARLINGTON HEIGHTS

WARRANT REGISTER

CHECK DATE: 2/15/2026

	CHECK #	ACCOUNT #	VENDOR NAME/#	DESCRIPTION	AMOUNT	TOTAL AMOUNT
Department 0601	**INFORMATION TECHNOLOGY ADMIN**					
						$242.24
	315684	625-0601-530050-	AMAZON COM CAPITAL SERVICES	OFFICE SUPPLIES	$12.99	
	315684	625-0601-530050-	AMAZON COM CAPITAL SERVICES	OFFICE SUPPLIES	$229.25	
						$48,932.00
	315702	625-0601-521020-	CDS OFFICE TECHNOLOGIES	OFFICE EQUIPMENT	$4,407.00	
	315702	625-0601-550100-	CDS OFFICE TECHNOLOGIES	OFFICE EQUIPMENT	$44,525.00	
						$725.40
	315703	625-0601-550100-	CDW GOVERNMENT INC	OFFICE EQUIPMENT	$725.40	
						$3,948.90
	315718	625-0601-522700-	COMCAST PROCESSING CENTER	ACCT 907065060	$3,948.90	
						$1,884.03
	315839	625-0601-522700-	VERIZON WIRELESS	ACCT 68500580500001	$1,884.03	
				DEPARTMENT 0601 TOTAL:	$55,732.57	

VILLAGE OF ARLINGTON HEIGHTS

WARRANT REGISTER

CHECK DATE: 2/15/2026

	CHECK #	ACCOUNT #	VENDOR NAME/#	DESCRIPTION	AMOUNT	TOTAL AMOUNT
Department 1001	**BOARDS & COMM ADMIN**					
						$83,100.00
	315771	101-1001-522020-	MEET CHICAGO NORTHWEST	DUES	$83,100.00	
				DEPARTMENT 1001 TOTAL:	$83,100.00	

VILLAGE OF ARLINGTON HEIGHTS

WARRANT REGISTER

CHECK DATE: 2/15/2026

	CHECK #	ACCOUNT #	VENDOR NAME/#	DESCRIPTION	AMOUNT	TOTAL AMOUNT
Department 1008	**BOARDS & COMM FIRE & POL COMM**					
						$225.00
	315724	101-1008-520750-	CONRAD POLYGRAPH INC	PROFESSIONAL SERVICES	$225.00	
				DEPARTMENT 1008 TOTAL:	$225.00	

VILLAGE OF ARLINGTON HEIGHTS

WARRANT REGISTER

CHECK DATE: 2/15/2026

	CHECK #	ACCOUNT #	VENDOR NAME/#	DESCRIPTION	AMOUNT	TOTAL AMOUNT
Department 1018	**BOARDS & COMM SPECIAL EVENTS**					
						$70.74
	315776	101-1018-540550-	MITCHELL, LAURIE	REIMBURSEMENT FOR HEARTS OF GOLD EVENT	$70.74	
				DEPARTMENT 1018 TOTAL:	$70.74	

VILLAGE OF ARLINGTON HEIGHTS

WARRANT REGISTER

CHECK DATE: 2/15/2026

	CHECK #	ACCOUNT #	VENDOR NAME/#	DESCRIPTION	AMOUNT	TOTAL AMOUNT
Department 3001	**POLICE DEPT ADMIN**					
						$2,286.80
	315677	101-3001-522030-	PETTY CASH/POLICE	MISCELLANEOUS SUPPLIES	$7.87	
	315677	101-3001-522030-	PETTY CASH/POLICE	RENTAL VEHICLE	$1,639.15	
	315677	101-3001-533050-	PETTY CASH/POLICE	MEETING SUPPLIES	$22.46	
	315677	101-3001-533050-	PETTY CASH/POLICE	MISCELLANEOUS SUPPLIES	$153.57	
	315677	101-3001-533050-	PETTY CASH/POLICE	MISCELLANEOUS SUPPLIES	$199.75	
	315677	101-3001-533050-	PETTY CASH/POLICE	MISCELLANEOUS SUPPLIES	$200.00	
	315677	101-3001-533050-	PETTY CASH/POLICE	UNIFORMS	$64.00	
						$13,843.90
	315689	101-3001-518030-	ARLINGTON HTS SCHOOL DIST 25	REIMBURSEMENT CROSSING GUARD	$13,843.90	
						$245.00
	315692	101-3001-522700-	AT&T	PROFESSIONAL SERVICES	$245.00	
						$1,305.00
	315722	101-3001-521650-	COMPASSION FUNERAL SERVICES INC	PROFESSIONAL SERVICES	$320.00	
	315722	101-3001-521650-	COMPASSION FUNERAL SERVICES INC	PROFESSIONAL SERVICES	$320.00	
	315722	101-3001-521650-	COMPASSION FUNERAL SERVICES INC	PROFESSIONAL SERVICES	$665.00	
						$2,733.00
	315727	101-3001-521652-	DACRA TECH LLC	PROFESSIONAL SERVICES	$2,733.00	
						$1,978.95
	315743	101-3001-521650-	GOLF ROSE PET LODGE	PROFESSIONAL SERVICES	$609.15	
	315743	101-3001-521650-	GOLF ROSE PET LODGE	PROFESSIONAL SERVICES	$1,369.80	
						$960.00
	315745	101-3001-522030-	HEFFERNAN, JEFFREY	TUITION REIMBURSEMENT	$960.00	
						$6,261.00

VILLAGE OF ARLINGTON HEIGHTS

WARRANT REGISTER

CHECK DATE: 2/15/2026

CHECK #	ACCOUNT #	VENDOR NAME/#	DESCRIPTION	AMOUNT	TOTAL AMOUNT
315749	101-3001-522030-	ILLINOIS STATE POLICE	TRAINING	$6,261.00	
					$2,962.30
315751	101-3001-530350-	JG UNIFORMS	UNIFORMS	$55.00	
315751	101-3001-530350-	JG UNIFORMS	UNIFORMS	$189.00	
315751	101-3001-530350-	JG UNIFORMS	UNIFORMS	$222.90	
315751	101-3001-530350-	JG UNIFORMS	UNIFORMS	$231.00	
315751	101-3001-530350-	JG UNIFORMS	UNIFORMS	$231.00	
315751	101-3001-530350-	JG UNIFORMS	UNIFORMS	$231.00	
315751	101-3001-530350-	JG UNIFORMS	UNIFORMS	$231.00	
315751	101-3001-530350-	JG UNIFORMS	UNIFORMS	$280.00	
315751	101-3001-530350-	JG UNIFORMS	UNIFORMS	$289.20	
315751	101-3001-530350-	JG UNIFORMS	UNIFORMS	$317.00	
315751	101-3001-530350-	JG UNIFORMS	UNIFORMS	$685.20	
					$540.00
315758	101-3001-521650-	KRYCA JAMES	REIMBURSEMENT	$540.00	
					$4,500.00
315767	101-3001-522030-	MAGNET FORENSICS, LLC	TRAINING	$4,500.00	
					$400.00
315780	101-3001-522020-	NORTH SUBURBAN ASSOC CHF POLICE	DUES	$400.00	
					$116,407.00
315781	101-3001-522020-	NORTHEASTERN IL REGIONAL CRIME LAB	MEMBERSHIP DUES	$116,407.00	
					$97,199.36
315784	101-3001-520370-	NORTHWEST CENTRAL DISPATCH SYSTEM	MEMBER ASSESSMENT	$48,168.71	
315784	101-3001-520370-	NORTHWEST CENTRAL DISPATCH SYSTEM	MEMBER ASSESSMENT	$49,030.65	
					$473.51

VILLAGE OF ARLINGTON HEIGHTS

WARRANT REGISTER

CHECK DATE: 2/15/2026

CHECK #	ACCOUNT #	VENDOR NAME/#	DESCRIPTION	AMOUNT	TOTAL AMOUNT
315789	101-3001-530050-	ODP BUSINESS SOLUTIONS	OFFICE SUPPLIES	$179.44	
315789	101-3001-530050-	ODP BUSINESS SOLUTIONS	OFFICE SUPPLIES	$294.07	
					$146.27
315797	101-3001-522020-	POLICE PETTY CASH	DUES	$60.00	
315797	101-3001-522030-	POLICE PETTY CASH	MISCELLANEOUS SUPPLIES	$61.32	
315797	101-3001-533050-	POLICE PETTY CASH	MEETING SUPPLIES	$24.95	
					$575.00
315798	101-3001-522020-	POLICE EXECUTIVE RESEARCH FORU	MEMBERSHIP DUES	$575.00	
					$3,639.03
315801	101-3001-530350-	RAY O'HERRON	UNIFORMS	$1,755.97	
315801	101-3001-530350-	RAY O'HERRON	UNIFORMS	$1,883.06	
					$8,085.00
315816	101-3001-521655-	TARGET SOLUTIONS LEARNING LLC	TRAINING SOFTWARE	$8,085.00	
					$157.50
315819	101-3001-530350-	TEGTMEYER, JEFFREY	REIMBURSEMENT	$157.50	
					$540.00
315824	101-3001-521650-	TURANO, MICHAEL	REIMBURSEMENT	$540.00	
					$206.56
315825	101-3001-530050-	ULINE INC	POLICE SUPPLIES	$206.56	
					$262.05
315833	101-3001-522700-	VERIZON WIRELESS	ACCT 68682493000001	$262.05	
			DEPARTMENT 3001 TOTAL:	$265,707.23	

VILLAGE OF ARLINGTON HEIGHTS

WARRANT REGISTER

CHECK DATE: 2/15/2026

	CHECK #	ACCOUNT #	VENDOR NAME/#	DESCRIPTION	AMOUNT	TOTAL AMOUNT
Department 3003	**POLICE DEPT CRIMINAL INVEST**					
						$43.68
	315687	231-3003-540010-	ARLINGTON HEIGHTS ANIMAL HOSPITAL	K9 SERVICES	$43.68	
						$196.59
	315795	231-3003-540010-	PET PROS	K9 SUPPLIES	$41.40	
	315795	231-3003-540010-	PET PROS	K9 SUPPLIES	$53.08	
	315795	231-3003-540010-	PET PROS	K9 SUPPLIES	$102.11	
						$3,284.27
	315826	231-3003-540010-	ULTRA STROBE COMMUNICATIONS INC	K9 SQUAD BUILD	$3,284.27	
						$635.52
	315841	231-3003-540010-	VETERINARY SPECIALTY CENTER	K9 SERVICES	$81.60	
	315841	231-3003-540010-	VETERINARY SPECIALTY CENTER	K9 SERVICES	$276.96	
	315841	231-3003-540010-	VETERINARY SPECIALTY CENTER	K9 SERVICES	$276.96	
				DEPARTMENT 3003 TOTAL:	$4,160.06	

VILLAGE OF ARLINGTON HEIGHTS

WARRANT REGISTER

CHECK DATE: 2/15/2026

	CHECK #	ACCOUNT #	VENDOR NAME/#	DESCRIPTION	AMOUNT	TOTAL AMOUNT
Department 3501	**FIRE ADMIN**					
						$422.20
	315684	101-3501-530050-	AMAZON COM CAPITAL SERVICES	FIRE SUPPLIES	$32.78	
	315684	101-3501-530050-	AMAZON COM CAPITAL SERVICES	OFFICE SUPPLIES	$20.99	
	315684	101-3501-530050-	AMAZON COM CAPITAL SERVICES	OFFICE SUPPLIES	$25.99	
	315684	101-3501-530350-	AMAZON COM CAPITAL SERVICES	CLOTHING & APPAREL	($98.70)	
	315684	101-3501-531650-	AMAZON COM CAPITAL SERVICES	FIRE EQUIPMENT	$45.05	
	315684	101-3501-531650-	AMAZON COM CAPITAL SERVICES	FIRE EQUIPMENT	$45.29	
	315684	101-3501-531650-	AMAZON COM CAPITAL SERVICES	FIRE EQUIPMENT	$45.29	
	315684	101-3501-531650-	AMAZON COM CAPITAL SERVICES	FIRE EQUIPMENT	$58.74	
	315684	101-3501-531650-	AMAZON COM CAPITAL SERVICES	FIRE SUPPLIES	$19.61	
	315684	101-3501-531650-	AMAZON COM CAPITAL SERVICES	FIRE SUPPLIES	$27.22	
	315684	101-3501-531650-	AMAZON COM CAPITAL SERVICES	FIRE SUPPLIES	$39.43	
	315684	101-3501-531650-	AMAZON COM CAPITAL SERVICES	FIRE SUPPLIES	$105.59	
	315684	101-3501-532800-	AMAZON COM CAPITAL SERVICES	BOOKS	$54.92	
						$47.14
	315700	101-3501-522150-	CANON U.S.A. INC	OFFICE MACHINES & ACCESS	$8.85	
	315700	101-3501-522150-	CANON U.S.A. INC	OFFICE MACHINES & ACCESS	$15.14	
	315700	101-3501-522150-	CANON U.S.A. INC	OFFICE MACHINES & ACCESS	$23.15	
						$1,300.00
	315734	101-3501-522030-	ELEVATED SAFETY	TRAVEL & TRAINING	$1,300.00	
						$321.98
	315752	101-3501-532800-	JONES AND BARTLETT LEARNING LLC	BOOKS	$321.98	
						$32,735.78
	315784	101-3501-520370-	NORTHWEST CENTRAL DISPATCH SYSTEM	MEMBER ASSESSMENT	$16,056.23	

VILLAGE OF ARLINGTON HEIGHTS

WARRANT REGISTER

CHECK DATE: 2/15/2026

CHECK #	ACCOUNT #	VENDOR NAME/#	DESCRIPTION	AMOUNT	TOTAL AMOUNT
315784	101-3501-520370-	NORTHWEST CENTRAL DISPATCH SYSTEM	MEMBER ASSESSMENT	$16,343.55	
315784	101-3501-521655-	NORTHWEST CENTRAL DISPATCH SYSTEM	SOFTWARE	$336.00	
					$33,857.38
315785	101-3501-520370-	NORTHWEST CENTRAL JOINT EMERGENCY MGMT SYSTEM	EMERGENCY MANAGEMENT SERVICES	$33,857.38	
					$3,000.00
315786	101-3501-521160-	NORTHWEST COMMUNITY HOSP	TRAINING	$2,925.00	
315786	101-3501-521160-	NORTHWEST COMMUNITY HOSP	TRAINING	$75.00	
					$319.80
315812	101-3501-521160-	STRYKER SALES CORP	MEDICAL SUPPLIES	$319.80	
					$3,250.00
315817	101-3501-533500-	TECHNICUFF	MEDICAL SUPPLIES	$3,250.00	
					$2,733.90
315822	101-3501-530350-	TODAY'S UNIFORMS	UNIFORMS AND RELATED ITEMS	$29.95	
315822	101-3501-530350-	TODAY'S UNIFORMS	UNIFORMS AND RELATED ITEMS	$42.95	
315822	101-3501-530350-	TODAY'S UNIFORMS	UNIFORMS AND RELATED ITEMS	$49.95	
315822	101-3501-530350-	TODAY'S UNIFORMS	UNIFORMS AND RELATED ITEMS	$49.95	
315822	101-3501-530350-	TODAY'S UNIFORMS	UNIFORMS AND RELATED ITEMS	$52.95	
315822	101-3501-530350-	TODAY'S UNIFORMS	UNIFORMS AND RELATED ITEMS	$52.95	
315822	101-3501-530350-	TODAY'S UNIFORMS	UNIFORMS AND RELATED ITEMS	$54.95	
315822	101-3501-530350-	TODAY'S UNIFORMS	UNIFORMS AND RELATED ITEMS	$55.90	
315822	101-3501-530350-	TODAY'S UNIFORMS	UNIFORMS AND RELATED ITEMS	$63.95	
315822	101-3501-530350-	TODAY'S UNIFORMS	UNIFORMS AND RELATED ITEMS	$71.95	
315822	101-3501-530350-	TODAY'S UNIFORMS	UNIFORMS AND RELATED ITEMS	$74.95	
315822	101-3501-530350-	TODAY'S UNIFORMS	UNIFORMS AND RELATED ITEMS	$76.95	
315822	101-3501-530350-	TODAY'S UNIFORMS	UNIFORMS AND RELATED ITEMS	$78.95	

VILLAGE OF ARLINGTON HEIGHTS

WARRANT REGISTER

CHECK DATE: 2/15/2026

CHECK #	ACCOUNT #	VENDOR NAME/#	DESCRIPTION	AMOUNT	TOTAL AMOUNT
315822	101-3501-530350-	TODAY'S UNIFORMS	UNIFORMS AND RELATED ITEMS	$78.95	
315822	101-3501-530350-	TODAY'S UNIFORMS	UNIFORMS AND RELATED ITEMS	$78.95	
315822	101-3501-530350-	TODAY'S UNIFORMS	UNIFORMS AND RELATED ITEMS	$84.95	
315822	101-3501-530350-	TODAY'S UNIFORMS	UNIFORMS AND RELATED ITEMS	$111.90	
315822	101-3501-530350-	TODAY'S UNIFORMS	UNIFORMS AND RELATED ITEMS	$119.95	
315822	101-3501-530350-	TODAY'S UNIFORMS	UNIFORMS AND RELATED ITEMS	$121.90	
315822	101-3501-530350-	TODAY'S UNIFORMS	UNIFORMS AND RELATED ITEMS	$157.90	
315822	101-3501-530350-	TODAY'S UNIFORMS	UNIFORMS AND RELATED ITEMS	$157.90	
315822	101-3501-530350-	TODAY'S UNIFORMS	UNIFORMS AND RELATED ITEMS	$157.90	
315822	101-3501-530350-	TODAY'S UNIFORMS	UNIFORMS AND RELATED ITEMS	$197.85	
315822	101-3501-530350-	TODAY'S UNIFORMS	UNIFORMS AND RELATED ITEMS	$199.85	
315822	101-3501-530350-	TODAY'S UNIFORMS	UNIFORMS AND RELATED ITEMS	$221.85	
315822	101-3501-530350-	TODAY'S UNIFORMS	UNIFORMS AND RELATED ITEMS	$287.75	
					$1,094.18
315830	101-3501-521160-	VERIZON WIRELESS	ACCT 44205897800001	$300.30	
315830	101-3501-522700-	VERIZON WIRELESS	ACCT 44205897800001	$793.88	
					$16,690.68
315842	101-3501-531850-	W.S. DARLEY & CO	TOOLS	$3,278.00	
315842	401-3501-550150-	W.S. DARLEY & CO	CLOTHING & APPAREL	$291.84	
315842	401-3501-550150-	W.S. DARLEY & CO	CLOTHING & APPAREL	$448.00	
315842	401-3501-550150-	W.S. DARLEY & CO	CLOTHING & APPAREL	$3,452.00	
315842	401-3501-550150-	W.S. DARLEY & CO	FIRE EQUIPMENT	$7,506.84	
315842	401-3501-550150-	W.S. DARLEY & CO	TOOLS	$1,714.00	
					$173.80
315847	101-3501-521110-	ZEP MANUFACTURING CO	JANITORIAL SUPPLIES	$173.80	
			DEPARTMENT 3501 TOTAL:	$95,946.84	

VILLAGE OF ARLINGTON HEIGHTS

WARRANT REGISTER

CHECK DATE: 2/15/2026

	CHECK #	ACCOUNT #	VENDOR NAME/#	DESCRIPTION	AMOUNT	TOTAL AMOUNT
Department 3701	**FOREIGN FIRE INSURANCE ADMIN**					
						$100.00
	315741	227-3701-521650-	GALLAGHER ARTHUR J & CO	BOND RENEWAL	$100.00	
						$5,149.80
	315747	227-3701-550150-	HENRICKSEN & COMPANY INC	FIRE STATION CHAIRS	$5,149.80	
						($166.42)
	315766	227-3701-550150-	LOWES COMMERCIAL SERVICES	TOOLS	($115.30)	
	315766	227-3701-550150-	LOWES COMMERCIAL SERVICES	TOOLS	($51.12)	
				DEPARTMENT 3701 TOTAL:	$5,083.38	

VILLAGE OF ARLINGTON HEIGHTS

WARRANT REGISTER

CHECK DATE: 2/15/2026

	CHECK #	ACCOUNT #	VENDOR NAME/#	DESCRIPTION	AMOUNT	TOTAL AMOUNT
Department 4001	**PLANNING PLANNING**					
						$400.00
	315731	263-4001-520050-	DOLAND ENGINEERING, LLC	PROFESSIONAL SERVICES	$400.00	
						$25.00
	315738	101-4001-530050-	FASTSIGNS	PRINTING SERVICES	$25.00	
						$50.00
	315814	101-4001-530050-	SUMMIT PRINT SOLUTIONS	PRINTING SERVICES	$50.00	
						$2,925.00
	902780	263-4001-520050-	ELROD FRIEDMAN LLP	LEGAL SERVICES	$712.50	
	902780	266-4001-520050-	ELROD FRIEDMAN LLP	LEGAL SERVICES	$2,212.50	
				DEPARTMENT 4001 TOTAL:	$3,400.00	

VILLAGE OF ARLINGTON HEIGHTS

WARRANT REGISTER

CHECK DATE: 2/15/2026

	CHECK #	ACCOUNT #	VENDOR NAME/#	DESCRIPTION	AMOUNT	TOTAL AMOUNT
Department 4101	**COMMUNITY DEVL BLK GRNTADMIN**					
	315706	215-4101-541170-	CHILDREN'S ADVOCACY CENTER	CDBG PROGRAM	$1,250.00	**$1,250.00**
	315723	215-4101-541620-	CONNECTIONS TO CARE	CDBG PROGRAM	$4,484.76	**$4,484.76**
	315737	215-4101-541700-	FAMILYFORWARD	CDBG PROGRAM	$875.00	**$875.00**
	315754	215-4101-541480-	JOURNEYS THE ROAD HOME	CDBG PROGRAM	$7,900.00	**$7,900.00**
	315783	215-4101-541680-	NORTHWEST CASA	CDBG PROGRAM	$1,250.00	**$1,250.00**
				DEPARTMENT 4101 TOTAL:	$15,759.76	

VILLAGE OF ARLINGTON HEIGHTS

WARRANT REGISTER

CHECK DATE: 2/15/2026

	CHECK #	ACCOUNT #	VENDOR NAME/#	DESCRIPTION	AMOUNT	TOTAL AMOUNT
Department 4501	**BUILDING ADMIN**					
						$190.45
	315684	101-4501-530050-	AMAZON COM CAPITAL SERVICES	OFFICE SUPPLIES	$30.82	
	315684	101-4501-530050-	AMAZON COM CAPITAL SERVICES	OFFICE SUPPLIES	$32.05	
	315684	101-4501-530050-	AMAZON COM CAPITAL SERVICES	OFFICE SUPPLIES	$47.45	
	315684	101-4501-530050-	AMAZON COM CAPITAL SERVICES	OFFICE SUPPLIES	$80.13	
						$25.64
	315700	101-4501-522150-	CANON U.S.A. INC	OFFICE MACHINES & ACCESS	$25.64	
						$50.00
	315735	101-4501-520050-	ELEVATOR INSPECTION SERVICE COMPANY LLC	PROFESSIONAL SERVICES	$50.00	
						$135.00
	315814	101-4501-522100-	SUMMIT PRINT SOLUTIONS	PRINTING SERVICES	$135.00	
						$542.97
	315834	101-4501-522700-	VERIZON WIRELESS	ACCT 54209747800001	$542.97	
						$165.70
	315835	101-4501-522700-	VERIZON WIRELESS	ACCT 54209747800002	$165.70	
				DEPARTMENT 4501 TOTAL:	$1,109.76	

VILLAGE OF ARLINGTON HEIGHTS

WARRANT REGISTER

CHECK DATE: 2/15/2026

	CHECK #	ACCOUNT #	VENDOR NAME/#	DESCRIPTION	AMOUNT	TOTAL AMOUNT
Department 7001	**HEALTH ADMIN**					
						$205.80
	315684	101-7001-520250-	AMAZON COM CAPITAL SERVICES	NURSING SUPPLIES	$99.90	
	315684	101-7001-530050-	AMAZON COM CAPITAL SERVICES	OFFICE SUPPLIES	$4.99	
	315684	101-7001-530050-	AMAZON COM CAPITAL SERVICES	OFFICE SUPPLIES	$9.98	
	315684	101-7001-530050-	AMAZON COM CAPITAL SERVICES	OFFICE SUPPLIES	$25.98	
	315684	101-7001-533100-	AMAZON COM CAPITAL SERVICES	NURSING SUPPLIES	$64.95	
						$228.00
	315686	101-7001-520250-	ARLINGTON CENTER FOR RECOVERY	COUNSELING SUBSIDY	$228.00	
						$17.51
	315700	101-7001-522150-	CANON U.S.A. INC	OFFICE MACHINES & ACCESS	$17.51	
						$297.34
	315726	101-7001-521655-	CUSTOM DATA PROCESSING	SOFTWARE	$297.34	
						$100.00
	315761	101-7001-520250-	LEMKE, SHERRY	COUNSELING SUBSIDY	$100.00	
						$40.60
	315796	101-7001-522030-	PETTY CASH	TRAVEL & TRAINING	$40.60	
						$158.52
	315840	101-7001-522700-	VERIZON WIRELESS	ACCT 6134576772	$158.52	
				DEPARTMENT 7001 TOTAL:	$1,047.77	

VILLAGE OF ARLINGTON HEIGHTS

WARRANT REGISTER

CHECK DATE: 2/15/2026

	CHECK #	ACCOUNT #	VENDOR NAME/#	DESCRIPTION	AMOUNT	TOTAL AMOUNT
Department 7007	**HEALTH SENIOR SERVICES**					
						$1,194.00
	315679	101-7007-521020-	ABT ELECTRONICS	APPLIANCE	$1,194.00	
						$330.00
	315685	101-7007-522400-	AMERICAN TAXI	TAXI SUBSIDY	$154.00	
	315685	101-7007-522400-	AMERICAN TAXI	TAXI SUBSIDY	$176.00	
						$375.00
	315695	101-7007-540160-	BETSEY MEANS WILLS	PROGRAM INSTRUCTIONAL FEE	$375.00	
						$180.00
	315696	101-7007-540160-	BLUE LOTUS BUDDHIST TEMPLE	PROGRAM INSTRUCTIONAL FEE	$180.00	
						$125.00
	315697	101-7007-540160-	BREAKING GROUNDS IN DRUMMING	PROGRAM INSTRUCTIONAL FEE	$125.00	
						$47.57
	315700	101-7007-522150-	CANON U.S.A. INC	OFFICE MACHINES & ACCESS	$47.57	
						$250.00
	315707	101-7007-540160-	CHINESE INTERCULTURAL, LLC	PROGRAM INSTRUCTIONAL FEE	$250.00	
						$250.00
	315732	101-7007-540160-	DREW WIEGMAN LLC	PROGRAM INSTRUCTIONAL FEE	$250.00	
						$225.00
	315755	101-7007-540160-	JOYCE E HAWORTH	PROGRAM INSTRUCTIONAL FEE	$225.00	
						$275.00
	315757	101-7007-540160-	KRISTA AUGUST	PROGRAM INSTRUCTIONAL FEE	$275.00	
						$175.00
	315821	101-7007-540160-	TIMOTHY COMMUNICATI	PROGRAM INSTRUCTIONAL FEE	$175.00	
						$250.00
	315846	101-7007-540160-	WPM PRODUCTIONS, INC.	PROGRAM INSTRUCTIONAL FEE	$250.00	

VILLAGE OF ARLINGTON HEIGHTS

WARRANT REGISTER

CHECK DATE: 2/15/2026

CHECK #	ACCOUNT #	VENDOR NAME/#	DESCRIPTION	AMOUNT	TOTAL AMOUNT
			DEPARTMENT 7007 TOTAL:	$3,676.57	

VILLAGE OF ARLINGTON HEIGHTS

WARRANT REGISTER

CHECK DATE: 2/15/2026

	CHECK #	ACCOUNT #	VENDOR NAME/#	DESCRIPTION	AMOUNT	TOTAL AMOUNT
Department 7101	**PUBLIC WORKS ADMIN**					
						$245.00
	315680	101-7101-522020-	ACTIVE TRANSPORTATION ALLIANCE	MEMBERSHIP DUES	$245.00	
						$6,755.75
	315698	101-7101-531900-	BUILDERS ASPHALT LLC	STREET SUPPLIES	$3,287.75	
	315698	101-7101-531900-	BUILDERS ASPHALT LLC	STREET SUPPLIES	$3,468.00	
						$167.66
	315700	101-7101-522150-	CANON U.S.A. INC	OFFICE MACHINES & ACCESS	$7.40	
	315700	101-7101-522150-	CANON U.S.A. INC	OFFICE MACHINES & ACCESS	$25.60	
	315700	101-7101-522150-	CANON U.S.A. INC	OFFICE MACHINES & ACCESS	$134.66	
						$14,100.92
	315708	401-7101-550600-	CHRISTOPHER B BURKE LTD	PROFESSIONAL SERVICES	$14,100.92	
						$17,518.50
	315709	426-7101-550250-	CIORBA GROUP, INC	PROFESSIONAL SERVICES	$17,518.50	
						$9,048.55
	315710	401-7101-550300-	CIVILTECH ENGINEERING INC	PROFESSIONAL SERVICES	$9,048.55	
						$184.65
	315711	101-7101-522700-	COMCAST CABLE	ACCT 8771100721360921	$184.65	
						$77.16
	315713	101-7101-522700-	COMCAST CABLE	ACCT 8771100720901436	$77.16	
						$32.10
	315716	101-7101-522700-	COMCAST CABLE	ACCT 8771100720048998	$32.10	
						$42.80
	315717	101-7101-522700-	COMCAST CABLE	ACCT 8771100720049004	$42.80	
						$173,951.29

VILLAGE OF ARLINGTON HEIGHTS

WARRANT REGISTER

CHECK DATE: 2/15/2026

CHECK #	ACCOUNT #	VENDOR NAME/#	DESCRIPTION	AMOUNT	TOTAL AMOUNT
315721	101-7101-531900-	COMPASS MINERALS AMERICA	STREET SUPPLIES	$1,335.87	
315721	101-7101-531900-	COMPASS MINERALS AMERICA	STREET SUPPLIES	$3,482.71	
315721	101-7101-531900-	COMPASS MINERALS AMERICA	STREET SUPPLIES	$8,659.36	
315721	101-7101-531900-	COMPASS MINERALS AMERICA	STREET SUPPLIES	$10,363.84	
315721	101-7101-531900-	COMPASS MINERALS AMERICA	STREET SUPPLIES	$11,750.88	
315721	101-7101-531900-	COMPASS MINERALS AMERICA	STREET SUPPLIES	$12,762.90	
315721	101-7101-531900-	COMPASS MINERALS AMERICA	STREET SUPPLIES	$13,059.27	
315721	101-7101-531900-	COMPASS MINERALS AMERICA	STREET SUPPLIES	$13,615.49	
315721	101-7101-531900-	COMPASS MINERALS AMERICA	STREET SUPPLIES	$20,733.30	
315721	101-7101-531900-	COMPASS MINERALS AMERICA	STREET SUPPLIES	$22,489.66	
315721	101-7101-531900-	COMPASS MINERALS AMERICA	STREET SUPPLIES	$26,662.82	
315721	101-7101-531900-	COMPASS MINERALS AMERICA	STREET SUPPLIES	$29,035.19	
					$18,820.00
315725	101-7101-521110-	CRYSTAL MAINTENANCE & MGMT SRVS	CLEANING SERVICES	$18,820.00	
					$4,432.26
315730	101-7101-521655-	DLT SOLUTIONS	SOFTWARE	$4,432.26	
					$41,200.75
315731	401-7101-550300-	DOLAND ENGINEERING, LLC	PROFESSIONAL SERVICES	$169.50	
315731	401-7101-550300-	DOLAND ENGINEERING, LLC	PROFESSIONAL SERVICES	$41,031.25	
					$790.00
315739	101-7101-522700-	FORERUNNER TECHNOLOGIES, INC	PHONE SERVICES	$790.00	
					$50.00
315742	101-7101-522020-	GIAMBELUCA, JOHN	REIMBURSEMENT	$50.00	
					$3,275.62
315744	401-7101-550200-	GRAINGER W W INC	BUILDING EQUIPMENT REPLACEMENT	$68.46	

VILLAGE OF ARLINGTON HEIGHTS

WARRANT REGISTER

CHECK DATE: 2/15/2026

CHECK #	ACCOUNT #	VENDOR NAME/#	DESCRIPTION	AMOUNT	TOTAL AMOUNT
315744	401-7101-550200-	GRAINGER W W INC	BUILDING MAINTENANCE SUPPLY	$268.42	
315744	401-7101-550200-	GRAINGER W W INC	BUILDING MAINTENANCE SUPPLY	$1,321.15	
315744	401-7101-550200-	GRAINGER W W INC	BUILDING MAINTENANCE SUPPLY	$1,617.59	
					$29.28
315746	101-7101-531900-	HELLER LUMBER CO	STREET & SIDEWALK SUPPLY	$29.28	
					$10,395.00
315750	101-7101-531900-	INDUSTRIAL SYSTEMS LTD	STREET & SIDEWALK SUPPLY	$3,465.00	
315750	101-7101-531900-	INDUSTRIAL SYSTEMS LTD	STREET & SIDEWALK SUPPLY	$3,465.00	
315750	101-7101-531900-	INDUSTRIAL SYSTEMS LTD	STREET & SIDEWALK SUPPLY	$3,465.00	
					$6,600.00
315756	101-7101-521650-	JULIE INC	ANNUAL ASSESSMENT FEE	$6,600.00	
					$36.99
315769	401-7101-550200-	MATTS ACE HARDWARE	BUILDING MAINTENANCE SUPPLY	$36.99	
					$181.23
315770	101-7101-531750-	MC MASTER CARR SUPPLY CO	STREET LIGHT SUPPLIES	$91.29	
315770	401-7101-550200-	MC MASTER CARR SUPPLY CO	BUILDING EQUIPMENT REPLACEMENT	$89.94	
					$3,257.20
315779	101-7101-521500-	NICOR	ACCT 01701843946	$3,257.20	
					$725.81
315787	101-7101-531550-	NORTHWEST ELECTRICAL SUPPLY CO	BUILDING MAINTENANCE SUPPLY	$621.56	
315787	101-7101-531750-	NORTHWEST ELECTRICAL SUPPLY CO	STREET LIGHT SUPPLIES	$104.25	
					$201.10
315789	101-7101-530050-	ODP BUSINESS SOLUTIONS	OFFICE SUPPLIES	$42.18	
315789	101-7101-530050-	ODP BUSINESS SOLUTIONS	OFFICE SUPPLIES	$52.94	
315789	101-7101-530050-	ODP BUSINESS SOLUTIONS	OFFICE SUPPLIES	$105.98	

VILLAGE OF ARLINGTON HEIGHTS
WARRANT REGISTER
CHECK DATE: 2/15/2026

CHECK #	ACCOUNT #	VENDOR NAME/#	DESCRIPTION	AMOUNT	TOTAL AMOUNT
					$39,500.07
315790	101-7101-530390-	OFFEN PETROLEUM LLC	FUEL	$18,240.48	
315790	101-7101-530390-	OFFEN PETROLEUM LLC	FUEL	$21,259.59	
					$139.73
315796	101-7101-530350-	PETTY CASH	CLOTHING	$39.80	
315796	101-7101-531650-	PETTY CASH	EVENT SUPPLIES	$8.98	
315796	101-7101-531650-	PETTY CASH	KITCHEN SUPPLIES	$90.95	
					$617.50
315799	101-7101-522700-	PRECISE MRM LLC	PHONE SERVICES	$617.50	
					$75.00
315800	101-7101-522700-	PTS COMMUNICATIONS INC	PHONE SERVICES	$75.00	
					$245.00
315802	101-7101-522020-	RIDE ILLINOIS	MEMBERSHIPS DUES	$245.00	
					$744.54
315810	101-7101-531550-	STEINER ELECTRIC COMPANY	BUILDING MAINTENANCE SUPPLY	($123.60)	
315810	101-7101-531550-	STEINER ELECTRIC COMPANY	BUILDING MAINTENANCE SUPPLY	$130.55	
315810	101-7101-531550-	STEINER ELECTRIC COMPANY	BUILDING MAINTENANCE SUPPLY	$439.75	
315810	101-7101-531550-	STEINER ELECTRIC COMPANY	BUILDING MAINTENANCE SUPPLY	$660.24	
315810	101-7101-531750-	STEINER ELECTRIC COMPANY	STREET LIGHT SUPPLIES	($362.40)	
					$21,125.37
315811	401-7101-550300-	STRAND ASSOCIATES, INC.	PROFESSIONAL SERVICES	$21,125.37	
					$13,222.00
315823	101-7101-521020-	TRAFFIC CONTROL CORP	EQUIPMENT MAINTENANCE	$13,192.00	
315823	101-7101-531700-	TRAFFIC CONTROL CORP	TRAFFIC SIGNAL SUPPLIES	$30.00	
					$720.52
315825	101-7101-530350-	ULINE INC	CLOTHING	$309.30	

VILLAGE OF ARLINGTON HEIGHTS

WARRANT REGISTER

CHECK DATE: 2/15/2026

CHECK #	ACCOUNT #	VENDOR NAME/#	DESCRIPTION	AMOUNT	TOTAL AMOUNT
315825	101-7101-531450-	ULINE INC	JANITORIAL SUPPLIES	$411.22	
					$3,975.00
315829	401-7101-550200-	VERDE SOLUTIONS LLC	SERVICE BUILDING MAINTENANCE	$3,975.00	
					$2,420.08
315831	101-7101-522700-	VERIZON WIRELESS	ACCT 58675303500001	$2,420.08	
					$364.06
802565	101-7101-522700-	AT&T	ACCT 84739420624707	$60.15	
802565	101-7101-522700-	AT&T	ACCT 84739443682112	$60.15	
802565	101-7101-522700-	AT&T	ACCT 84734215365273	$60.16	
802565	101-7101-522700-	AT&T	ACCT 84779713213488	$60.27	
802565	101-7101-522700-	AT&T	ACCT 84739271083278	$60.70	
802565	101-7101-522700-	AT&T	ACCT 84739208661733	$62.63	
					$9,157.50
802566	101-7101-521500-	COMMONWEALTH EDISON COMPANY	ACCT 1158409000	$81.41	
802566	101-7101-521500-	COMMONWEALTH EDISON COMPANY	ACCT 6437571222	$569.67	
802566	101-7101-521500-	COMMONWEALTH EDISON COMPANY	ACCT 4410867000	$8,506.42	
					$18,950.80
802567	101-7101-521500-	CONSTELLATION NEW ENERGY INC	ACCT 8063218	$1,059.17	
802567	101-7101-521500-	CONSTELLATION NEW ENERGY INC	ACCT 8063214	$17,891.63	
					$25,691.04
802568	101-7101-521500-	NICOR	ACCT 06802945268	$58.04	
802568	101-7101-521500-	NICOR	ACCT 19426400008	$159.72	
802568	101-7101-521500-	NICOR	ACCT 40178600009	$253.85	
802568	101-7101-521500-	NICOR	ACCT 72489260108	$304.17	
802568	101-7101-521500-	NICOR	ACCT 38178600003	$515.99	

VILLAGE OF ARLINGTON HEIGHTS

WARRANT REGISTER

CHECK DATE: 2/15/2026

CHECK #	ACCOUNT #	VENDOR NAME/#	DESCRIPTION	AMOUNT	TOTAL AMOUNT
802568	101-7101-521500-	NICOR	ACCT 28178600004	$532.94	
802568	101-7101-521500-	NICOR	ACCT 43278600002	$555.11	
802568	101-7101-521500-	NICOR	ACCT 94830700004	$673.23	
802568	101-7101-521500-	NICOR	ACCT 15839647334	$801.90	
802568	101-7101-521500-	NICOR	ACCT 38096400007	$1,166.67	
802568	101-7101-521500-	NICOR	ACCT 95407400001	$1,480.88	
802568	101-7101-521500-	NICOR	ACCT 53278600001	$1,734.77	
802568	101-7101-521500-	NICOR	ACCT 97034457784	$2,270.57	
802568	101-7101-521500-	NICOR	ACCT 96945600003	$3,111.36	
802568	101-7101-521500-	NICOR	ACCT 55616726109	$5,920.97	
802568	101-7101-521500-	NICOR	ACCT 25422686599	$6,150.87	
			DEPARTMENT 7101 TOTAL:	$449,067.83	

VILLAGE OF ARLINGTON HEIGHTS

WARRANT REGISTER

CHECK DATE: 2/15/2026

	CHECK #	ACCOUNT #	VENDOR NAME/#	DESCRIPTION	AMOUNT	TOTAL AMOUNT
Department 7201	**WATER AND SEWER ADMIN**					
						$1,515.39
	315681	505-7201-520050-	ALEXANDER CHEMICAL CORP	PROFESSIONAL SERVICES	$1,515.39	
						$2,931.00
	315694	505-7201-520050-	BAXTER & WOODMAN	PROFESSIONAL SERVICES	$331.00	
	315694	505-7201-520050-	BAXTER & WOODMAN	PROFESSIONAL SERVICES	$2,600.00	
						$210.80
	315712	505-7201-522700-	COMCAST CABLE	ACCT 8771100720175502	$210.80	
						$2.31
	315715	505-7201-522700-	COMCAST CABLE	ACCT 8771100720048980	$2.31	
						$197.97
	315719	505-7201-521500-	COMMONWEALTH EDISON COMPANY	ACCT 45549270000326	$197.97	
						$43.10
	315720	505-7201-521500-	COMMONWEALTH EDISON COMPANY	ACCT 35821021110126	$43.10	
						$555.97
	315728	505-7201-521500-	DIRECT ENERGY BUSINESS MARKETING LLC	ACCT 180660	$555.97	
						$10,203.63
	315729	505-7201-521500-	DIRECT ENERGY BUSINESS MARKETING LLC	ACCT 1806638	$10,203.63	
						$835.31
	315733	505-7201-531850-	EJ EQUIPMENT INCORPORATED	SMALL TOOLS & EQUIPMENT	$835.31	
						$376.16
	315744	505-7201-531550-	GRAINGER W W INC	BUILDING MAINTENANCE SUPPLY	$11.60	
	315744	505-7201-531550-	GRAINGER W W INC	BUILDING MAINTENANCE SUPPLY	$26.90	
	315744	505-7201-531550-	GRAINGER W W INC	BUILDING MAINTENANCE SUPPLY	$60.90	

VILLAGE OF ARLINGTON HEIGHTS

WARRANT REGISTER

CHECK DATE: 2/15/2026

CHECK #	ACCOUNT #	VENDOR NAME/#	DESCRIPTION	AMOUNT	TOTAL AMOUNT
315744	505-7201-531650-	GRAINGER W W INC	MISCELLANEOUS SUPPLIES	$99.72	
315744	505-7201-531850-	GRAINGER W W INC	SMALL TOOLS & EQUIPMENT	$177.04	
					$10,530.55
315756	505-7201-521650-	JULIE INC	ANNUAL ASSESSMENT FEE	$10,530.55	
					$283.47
315766	505-7201-531550-	LOWES COMMERCIAL SERVICES	BUILDING MAINTENANCE SUPPLY	$16.13	
315766	505-7201-531550-	LOWES COMMERCIAL SERVICES	BUILDING MAINTENANCE SUPPLY	$43.21	
315766	505-7201-531550-	LOWES COMMERCIAL SERVICES	BUILDING MAINTENANCE SUPPLY	$49.58	
315766	505-7201-531550-	LOWES COMMERCIAL SERVICES	BUILDING MAINTENANCE SUPPLY	$72.19	
315766	505-7201-531850-	LOWES COMMERCIAL SERVICES	SMALL TOOLS & EQUIPMENT	$39.68	
315766	505-7201-531850-	LOWES COMMERCIAL SERVICES	SMALL TOOLS & EQUIPMENT	$62.68	
					$6.00
315769	505-7201-531850-	MATTS ACE HARDWARE	SMALL TOOLS & EQUIPMENT	$6.00	
					$184.08
315772	505-7201-531850-	MENARDS-LONG GROVE	SMALL TOOLS & EQUIPMENT	$29.14	
315772	505-7201-531850-	MENARDS-LONG GROVE	SMALL TOOLS & EQUIPMENT	$154.94	
					$1,215.40
315775	505-7201-531010-	MID AMERICAN WATER OF WAUCONDA, INC.	WATER SYSTEM SUPPLIES	$855.00	
315775	505-7201-531010-	MID AMERICAN WATER OF WAUCONDA, INC.	WATER SYSTEM SUPPLIES	$360.40	
					$237.76
315789	505-7201-530050-	ODP BUSINESS SOLUTIONS	OFFICE SUPPLIES	$237.76	
					$617.50
315799	505-7201-522700-	PRECISE MRM LLC	PHONE SERVICES	$617.50	
					$980.80
315807	505-7201-522030-	SCOTT SCHWEDA	TRAVEL AND TRAINING	$980.80	

VILLAGE OF ARLINGTON HEIGHTS

WARRANT REGISTER

CHECK DATE: 2/15/2026

CHECK #	ACCOUNT #	VENDOR NAME/#	DESCRIPTION	AMOUNT	TOTAL AMOUNT
					$1,543.60
315813	505-7201-520050-	SUBURBAN LABORATORIES INC	PROFESSIONAL SERVICES	$1,543.60	
					$50,042.07
315818	505-7201-550150-	TECORP, INC	SERVICE BUILING MAINTENANCE	$50,042.07	
					$1,613.38
315831	505-7201-522700-	VERIZON WIRELESS	ACCT 58675303500001	$1,613.38	
					$376.13
315832	505-7201-522700-	VERIZON WIRELESS	ACCT 58675303500001	$376.13	
					$154.14
315848	505-7201-531850-	ZORO TOOLS INC	SMALL TOOLS & EQUIPMENT	$154.14	
					$123.53
802565	505-7201-522700-	AT&T	ACCT 84759080850047	$123.53	
					$331.81
802566	505-7201-521500-	COMMONWEALTH EDISON COMPANY	ACCT 6949217000	$165.81	
802566	505-7201-521500-	COMMONWEALTH EDISON COMPANY	ACCT 9425223333	$166.00	
					$14,639.32
802567	505-7201-521500-	CONSTELLATION NEW ENERGY INC	ACCT 1050218	$4,289.71	
802567	505-7201-521500-	CONSTELLATION NEW ENERGY INC	ACCT 1050220	$10,349.61	
					$925.95
802568	505-7201-521500-	NICOR	ACCT 42567835683	$71.16	
802568	505-7201-521500-	NICOR	ACCT 05850400002	$88.91	
802568	505-7201-521500-	NICOR	ACCT 16797600000	$158.99	
802568	505-7201-521500-	NICOR	ACCT 04055600003	$180.18	
802568	505-7201-521500-	NICOR	ACCT 76830700001	$426.71	
			DEPARTMENT 7201 TOTAL:	$100,677.13	

VILLAGE OF ARLINGTON HEIGHTS

WARRANT REGISTER

CHECK DATE: 2/15/2026

	CHECK #	ACCOUNT #	VENDOR NAME/#	DESCRIPTION	AMOUNT	TOTAL AMOUNT
Department 7301	**PARKING ADMIN**					
						$248.23
	315691	235-7301-521500-	AT&T	ACCT 847R0608437214	$248.23	
						$963.39
	802566	235-7301-521500-	COMMONWEALTH EDISON COMPANY	ACCT 9934124000	$963.39	
				DEPARTMENT 7301 TOTAL:	$1,211.62	

VILLAGE OF ARLINGTON HEIGHTS

WARRANT REGISTER

CHECK DATE: 2/15/2026

	CHECK #	ACCOUNT #	VENDOR NAME/#	DESCRIPTION	AMOUNT	TOTAL AMOUNT
Department 7302	**PARKING VAIL ST. GARAGE OPER**					
						$184.65
	315714	235-7302-521500-	COMCAST CABLE	ACCT 8771100721377909	$184.65	
				DEPARTMENT 7302 TOTAL:	$184.65	

VILLAGE OF ARLINGTON HEIGHTS

WARRANT REGISTER

CHECK DATE: 2/15/2026

	CHECK #	ACCOUNT #	VENDOR NAME/#	DESCRIPTION	AMOUNT	TOTAL AMOUNT
Department 7303	**PARKING NORTH GARAGE OPER**					
						$2,097.27
	802567	235-7303-521500-	CONSTELLATION NEW ENERGY INC	ACCT 1060231	$2,097.27	
						$59.44
	802568	235-7303-521500-	NICOR	ACCT 12690400002	$59.44	
				DEPARTMENT 7303 TOTAL:	$2,156.71	

VILLAGE OF ARLINGTON HEIGHTS

WARRANT REGISTER

CHECK DATE: 2/15/2026

	CHECK #	ACCOUNT #	VENDOR NAME/#	DESCRIPTION	AMOUNT	TOTAL AMOUNT
Department 7304	**PARKING EVERGREEN ST GAR OPER**					
						$163.66
	802568	235-7304-521500-	NICOR	ACCT 92296400002	$163.66	
				DEPARTMENT 7304 TOTAL:	$163.66	

VILLAGE OF ARLINGTON HEIGHTS

WARRANT REGISTER

CHECK DATE: 2/15/2026

	CHECK #	ACCOUNT #	VENDOR NAME/#	DESCRIPTION	AMOUNT	TOTAL AMOUNT
Department 7401	**SOLID WASTE DISPSL SWANCCADMIN**					
						$151,122.00
	902778	511-7401-521540-	SOLID WASTE AGENCY	TIPPING FEES	$1,667.00	
	902778	511-7401-521540-	SOLID WASTE AGENCY	TIPPING FEES	$149,455.00	
				DEPARTMENT 7401 TOTAL:	$151,122.00	

VILLAGE OF ARLINGTON HEIGHTS

WARRANT REGISTER

CHECK DATE: 2/15/2026

	CHECK #	ACCOUNT #	VENDOR NAME/#	DESCRIPTION	AMOUNT	TOTAL AMOUNT
Department 7501	**MUNICIPAL FLEET SVCS ADMIN**					
						$1,529.16
	315683	621-7501-531510-	ALTORFER INDUSTRIES	VEH MAINTENANCE SUPPLY	$35.29	
	315683	621-7501-531510-	ALTORFER INDUSTRIES	VEH MAINTENANCE SUPPLY	$247.47	
	315683	621-7501-531510-	ALTORFER INDUSTRIES	VEH MAINTENANCE SUPPLY	$264.67	
	315683	621-7501-531510-	ALTORFER INDUSTRIES	VEH MAINTENANCE SUPPLY	$981.73	
						$395.57
	315688	621-7501-531510-	ARLINGTON HTS FORD	VEH MAINTENANCE SUPPLY	$109.21	
	315688	621-7501-531510-	ARLINGTON HTS FORD	VEH MAINTENANCE SUPPLY	$286.36	
						$1,300.00
	315693	621-7501-531510-	AUTO TECH CENTERS INC	VEH MAINTENANCE SUPPLY	$1,300.00	
						$478.57
	315699	621-7501-531510-	BUMPER TO BUMPER	VEH MAINTENANCE SUPPLY	$28.61	
	315699	621-7501-531510-	BUMPER TO BUMPER	VEH MAINTENANCE SUPPLY	$32.00	
	315699	621-7501-531510-	BUMPER TO BUMPER	VEH MAINTENANCE SUPPLY	$79.72	
	315699	621-7501-531510-	BUMPER TO BUMPER	VEH MAINTENANCE SUPPLY	$159.96	
	315699	621-7501-531510-	BUMPER TO BUMPER	VEH MAINTENANCE SUPPLY	$178.28	
						$436.16
	315704	621-7501-531510-	CHICAGO PARTS & SOUND ENTERPRISES	VEH MAINTENANCE SUPPLY	($33.00)	
	315704	621-7501-531510-	CHICAGO PARTS & SOUND ENTERPRISES	VEH MAINTENANCE SUPPLY	($11.00)	
	315704	621-7501-531510-	CHICAGO PARTS & SOUND ENTERPRISES	VEH MAINTENANCE SUPPLY	$162.72	
	315704	621-7501-531510-	CHICAGO PARTS & SOUND ENTERPRISES	VEH MAINTENANCE SUPPLY	$317.44	
						$435.00
	315736	621-7501-531510-	FACTORY MOTOR PARTS	VEH MAINTENANCE SUPPLY	$435.00	

VILLAGE OF ARLINGTON HEIGHTS

WARRANT REGISTER

CHECK DATE: 2/15/2026

CHECK #	ACCOUNT #	VENDOR NAME/#	DESCRIPTION	AMOUNT	TOTAL AMOUNT
					$216.22
315744	621-7501-531510-	GRAINGER W W INC	VEH MAINTENANCE SUPPLY	$22.55	
315744	621-7501-531510-	GRAINGER W W INC	VEH MAINTENANCE SUPPLY	$49.99	
315744	621-7501-531510-	GRAINGER W W INC	VEH MAINTENANCE SUPPLY	$143.68	
					$1,428.00
315748	621-7501-521020-	IDENTIFIX	MISCELLANEOUS SUPPLIES	$1,428.00	
					$95.88
315759	621-7501-531510-	LEACH ENTERPRISES INC	VEH MAINTENANCE SUPPLY	$95.88	
					$1,545.43
315760	621-7501-531510-	LEAHY-WOLF COMPANY	VEH MAINTENANCE SUPPLY	$540.00	
315760	621-7501-531510-	LEAHY-WOLF COMPANY	VEH MAINTENANCE SUPPLY	$1,005.43	
					$1,045.10
315762	621-7501-521070-	LIBERTY TIRE RECYCLING	EQUIPMENT MAINTENANCE	$1,045.10	
					$1,529.55
315763	621-7501-521070-	LINDCO EQUIPMENT SALES INC	EQUIPMENT MAINTENANCE	$1,529.55	
					$790.90
315764	621-7501-531510-	LORCHEM TECHNOLOGIES INC	VEH MAINTENANCE SUPPLY	$790.90	
					$999.00
315768	621-7501-531510-	MASTER HITCH INC	VEH MAINTENANCE SUPPLY	$999.00	
					$92.27
315770	621-7501-531510-	MC MASTER CARR SUPPLY CO	VEH MAINTENANCE SUPPLY	$92.27	
					$415.00
315777	621-7501-531510-	MPC COMMUNICATIONS & LIGHTING INC	VEH MAINTENANCE SUPPLY	$415.00	
					$5,578.87
315778	621-7501-531510-	NAPA AUTO PARTS	VEH MAINTENANCE SUPPLY	$13.32	

VILLAGE OF ARLINGTON HEIGHTS

WARRANT REGISTER

CHECK DATE: 2/15/2026

CHECK #	ACCOUNT #	VENDOR NAME/#	DESCRIPTION	AMOUNT	TOTAL AMOUNT
315778	621-7501-531510-	NAPA AUTO PARTS	VEH MAINTENANCE SUPPLY	$17.76	
315778	621-7501-531510-	NAPA AUTO PARTS	VEH MAINTENANCE SUPPLY	$18.91	
315778	621-7501-531510-	NAPA AUTO PARTS	VEH MAINTENANCE SUPPLY	$19.54	
315778	621-7501-531510-	NAPA AUTO PARTS	VEH MAINTENANCE SUPPLY	$38.84	
315778	621-7501-531510-	NAPA AUTO PARTS	VEH MAINTENANCE SUPPLY	$43.82	
315778	621-7501-531510-	NAPA AUTO PARTS	VEH MAINTENANCE SUPPLY	$56.00	
315778	621-7501-531510-	NAPA AUTO PARTS	VEH MAINTENANCE SUPPLY	$63.71	
315778	621-7501-531510-	NAPA AUTO PARTS	VEH MAINTENANCE SUPPLY	$64.99	
315778	621-7501-531510-	NAPA AUTO PARTS	VEH MAINTENANCE SUPPLY	$72.36	
315778	621-7501-531510-	NAPA AUTO PARTS	VEH MAINTENANCE SUPPLY	$85.06	
315778	621-7501-531510-	NAPA AUTO PARTS	VEH MAINTENANCE SUPPLY	$99.00	
315778	621-7501-531510-	NAPA AUTO PARTS	VEH MAINTENANCE SUPPLY	$162.92	
315778	621-7501-531510-	NAPA AUTO PARTS	VEH MAINTENANCE SUPPLY	$196.71	
315778	621-7501-531510-	NAPA AUTO PARTS	VEH MAINTENANCE SUPPLY	$255.55	
315778	621-7501-531510-	NAPA AUTO PARTS	VEH MAINTENANCE SUPPLY	$277.20	
315778	621-7501-531510-	NAPA AUTO PARTS	VEH MAINTENANCE SUPPLY	$529.16	
315778	621-7501-531510-	NAPA AUTO PARTS	VEH MAINTENANCE SUPPLY	$721.06	
315778	621-7501-531510-	NAPA AUTO PARTS	VEH MAINTENANCE SUPPLY	$728.97	
315778	621-7501-531510-	NAPA AUTO PARTS	VEH MAINTENANCE SUPPLY	$914.00	
315778	621-7501-531650-	NAPA AUTO PARTS	MISCELLANEOUS SUPPLIES	$1,199.99	
					$820.55
315782	621-7501-521070-	NORTHWEST AUTO WASH	EQUIPMENT MAINTENANCE	$326.10	
315782	621-7501-521070-	NORTHWEST AUTO WASH	EQUIPMENT MAINTENANCE	$494.45	
					$242.46
315788	621-7501-531510-	NORTHWEST FREIGHTLINER	VEH MAINTENANCE SUPPLY	($118.28)	
315788	621-7501-531510-	NORTHWEST FREIGHTLINER	VEH MAINTENANCE SUPPLY	$56.17	

VILLAGE OF ARLINGTON HEIGHTS

WARRANT REGISTER

CHECK DATE: 2/15/2026

CHECK #	ACCOUNT #	VENDOR NAME/#	DESCRIPTION	AMOUNT	TOTAL AMOUNT
315788	621-7501-531510-	NORTHWEST FREIGHTLINER	VEH MAINTENANCE SUPPLY	$56.17	
315788	621-7501-531510-	NORTHWEST FREIGHTLINER	VEH MAINTENANCE SUPPLY	$248.40	
					$651.76
315794	621-7501-531510-	PATLIN INC	VEH MAINTENANCE SUPPLY	($202.50)	
315794	621-7501-531510-	PATLIN INC	VEH MAINTENANCE SUPPLY	$247.02	
315794	621-7501-531510-	PATLIN INC	VEH MAINTENANCE SUPPLY	$607.24	
					$777.57
315799	621-7501-531510-	PRECISE MRM LLC	VEH MAINTENANCE SUPPLY	$777.57	
					$30.60
315804	621-7501-531510-	RUBBER INC	VEH MAINTENANCE SUPPLY	$30.60	
					$1,979.39
315805	621-7501-531510-	RUSH TRUCK CENTER-CAROL STREAM	VEH MAINTENANCE SUPPLY	$24.90	
315805	621-7501-531510-	RUSH TRUCK CENTER-CAROL STREAM	VEH MAINTENANCE SUPPLY	$150.00	
315805	621-7501-531510-	RUSH TRUCK CENTER-CAROL STREAM	VEH MAINTENANCE SUPPLY	$187.90	
315805	621-7501-531510-	RUSH TRUCK CENTER-CAROL STREAM	VEH MAINTENANCE SUPPLY	$230.00	
315805	621-7501-531510-	RUSH TRUCK CENTER-CAROL STREAM	VEH MAINTENANCE SUPPLY	$691.59	
315805	621-7501-531510-	RUSH TRUCK CENTER-CAROL STREAM	VEH MAINTENANCE SUPPLY	$695.00	
					$94.47
315808	621-7501-531510-	SELECT TECH	VEH MAINTENANCE SUPPLY	$94.47	
					$373.16
315820	621-7501-531510-	TERMINAL SUPPLY CO	VEH MAINTENANCE SUPPLY	$373.16	
					$188.70
315828	621-7501-530350-	UNIFIRST CORPORATION	CLOTHING	$94.35	
315828	621-7501-530350-	UNIFIRST CORPORATION	CLOTHING	$94.35	

VILLAGE OF ARLINGTON HEIGHTS

WARRANT REGISTER

CHECK DATE: 2/15/2026

CHECK #	ACCOUNT #	VENDOR NAME/#	DESCRIPTION	AMOUNT	TOTAL AMOUNT
					$295.00
315843	621-7501-521070-	WE WASH EXPRESS	EQUIPMENT MAINTENANCE	$55.00	
315843	621-7501-521070-	WE WASH EXPRESS	EQUIPMENT MAINTENANCE	$240.00	
					$3,407.30
315844	621-7501-531510-	WENTWORTH TIRE SERVICE	VEH MAINTENANCE SUPPLY	$3,407.30	
					$558.83
315848	621-7501-531510-	ZORO TOOLS INC	VEH MAINTENANCE SUPPLY	$179.54	
315848	621-7501-531510-	ZORO TOOLS INC	VEH MAINTENANCE SUPPLY	$206.09	
315848	621-7501-531650-	ZORO TOOLS INC	MISCELLANEOUS SUPPLIES	$74.20	
315848	621-7501-531850-	ZORO TOOLS INC	SMALL TOOLS & EQUIPMENT	$99.00	
			DEPARTMENT 7501 TOTAL:	$27,730.47	

VILLAGE OF ARLINGTON HEIGHTS

WARRANT REGISTER

CHECK DATE: 2/15/2026

	CHECK #	ACCOUNT #	VENDOR NAME/#	DESCRIPTION	AMOUNT	TOTAL AMOUNT
Department 9001	**CAPITAL ADMIN**					
						$28,995.25
	315694	505-9001-550250-	BAXTER & WOODMAN	PROFESSIONAL SERVICES	$1,665.25	
	315694	505-9001-550250-	BAXTER & WOODMAN	PROFESSIONAL SERVICES	$10,307.00	
	315694	506-9001-550250-	BAXTER & WOODMAN	PROFESSIONAL SERVICES	$17,023.00	
						$6,363.00
	315709	505-9001-550250-	CIORBA GROUP, INC	PROFESSIONAL SERVICES	$6,363.00	
						$248,106.51
	315818	505-9001-550250-	TECORP, INC	SERVICE BUILDING MAINTENANCE	$248,106.51	
				DEPARTMENT 9001 TOTAL:	$283,464.76	

VILLAGE OF ARLINGTON HEIGHTS

WARRANT REGISTER

CHECK DATE: 2/15/2026

	CHECK #	ACCOUNT #	VENDOR NAME/#	DESCRIPTION	AMOUNT	TOTAL AMOUNT
Department 9003	**CAPITAL EQUIPMENT**					
						$161,456.00
	315763	621-9003-550050-	LINDCO EQUIPMENT SALES INC	EQUIPMENT	$161,456.00	
						$63,133.00
	315815	621-9003-550050-	SUTTON FORD INCORPORATED	VEHICLE	$63,133.00	
				DEPARTMENT 9003 TOTAL:	$224,589.00	

VILLAGE OF ARLINGTON HEIGHTS

WARRANT REGISTER

CHECK DATE: 2/15/2026

	CHECK #	ACCOUNT #	VENDOR NAME/#	DESCRIPTION	AMOUNT	TOTAL AMOUNT
Department 9555	**DEBT SVC POLICE STATION 2016**					
						$318.00
	315827	301-9555-560200-	UMB BANK NA	AGENT FEES	$318.00	
				DEPARTMENT 9555 TOTAL:	$318.00	

VILLAGE OF ARLINGTON HEIGHTS

WARRANT REGISTER

CHECK DATE: 2/15/2026

	CHECK #	ACCOUNT #	VENDOR NAME/#	DESCRIPTION	AMOUNT	TOTAL AMOUNT
Department 9901	**NON-OPERATING**					
						$19,423.55
	315774	515-9901-540830-	METROPOLIS COMMERCIAL CONDO ASSN	CAM CHARGE	$1,580.09	
	315774	515-9901-540830-	METROPOLIS COMMERCIAL CONDO ASSN	CAM CHARGE	$2,642.07	
	315774	515-9901-540830-	METROPOLIS COMMERCIAL CONDO ASSN	CAM CHARGE	$10,584.54	
	315774	515-9901-540910-	METROPOLIS COMMERCIAL CONDO ASSN	BUILDING RESERVE CHARGE	$193.83	
	315774	515-9901-540910-	METROPOLIS COMMERCIAL CONDO ASSN	BUILDING RESERVE CHARGE	$4,423.02	
				DEPARTMENT 9901 TOTAL:	$19,423.55	
				WARRANT TOTAL:	**$2,737,202.04**	

VILLAGE OF ARLINGTON HEIGHTS
INC. 1887

Village Board of Trustees
2/17/2026

Item: 2025 Cultural Arts Award to Tamaron Conseur
Department: Planning & Community Development

Item Description:
2025 Cultural Arts Award presentation to Tamaron Conseur

<u>The 2025 Arlington Heights Cultural Arts Award</u>
The Arts Commission established a Cultural Arts Award to be presented to an outstanding artist who has contributed to the arts in Arlington Heights. The award celebrates achievements by artists. The goal of the award is to assist in building on the sense of pride and community in the Village and among local artists.

ATTACHMENTS:
None

VILLAGE OF ARLINGTON HEIGHTS
INC. 1887

Village Board of Trustees
2/17/2026

Item: Stranger Things Recognition
Department: Integrated Services

Item Description:
The Village of Arlington Heights recognizes February 17, 2026 as Stranger Things Day and honors Jake Connelly for the positive attention brought to his hometown of Arlington Heights due to his professional and creative work as an actor.

ATTACHMENTS:
1. stranger things proc

Village of Arlington Heights Proclamation
Recognizing Stranger Things Day
Presented to Jake Connelly

WHEREAS, Jake Connelly's professional and creative work as an actor has brought positive attention to his hometown of Arlington Heights, IL; and

WHEREAS, Jake Connelly is known to audiences for his role as Derek on *Stranger Things*, a character who begins as closed off to others, combative, and labeled with a nickname that reflects his difficult attitude, but whose story ultimately becomes one of trust, personal evolution, and courage; and

WHEREAS, when faced with moments that demand bravery and responsibility — even when his world is turned *upside down* — Derek is given the opportunity to step up and rise to the occasion; and

WHEREAS, Derek's evolution reminds us all that growth is possible, second chances matter, and doing the right thing is always an option – even when it's easier to run away; and

WHEREAS, Jake Connelly's work has earned national recognition, including an appearance on The Tonight Show Starring Jimmy Fallon, spotlighting his talent on a national stage; and

WHEREAS, this success was made possible in part through the support of his mother, family, and community, who provided encouragement while he was filming away from home for more than a year; and

NOW, THEREFORE, BE IT PROCLAIMED, that the Village of Arlington Heights hereby recognizes Jake Connelly for representing his hometown through his work and for portraying a character who rises to the moment when it matters most; and celebrates the message at the heart of this story — that people can grow and choose a better path — proving that anyone can become "Delightful."

NOW, THEREFORE, I, James J. Tinaglia, Mayor of the Village of Arlington Heights, along with the Arlington Heights Village Board of Trustees, do hereby proclaim February 17, of 2026 as ***Stranger Things Day*** in the Village of Arlington Heights.

James J. Tinaglia, Mayor

Trustee James Bertucci
Trustee Wendy Dunnington
Trustee Colin H. Gilbert
Trustee Robin LaBedz

Trustee Bill Manganaro
Trustee Carina Santa Maria
Trustee Tom Schwingbeck
Trustee Greg Zyck

VILLAGE OF ARLINGTON HEIGHTS
INC. 1887

Village Board of Trustees
2/17/2026

Item: Police Promotions
Department: Police

Item Description:
The Arlington Heights Police Department is proud to recognize the promotions of Commander Valerie Andrews to the position of Deputy Chief of Police and Sergeant Joseph Murphy to the position of Police Commander. After a competitive selection process, the Chief of Police and Village Manager unanimously agreed to promote Commander Andrews and Sergeant Murphy to the Police Department's management and senior executive teams. Congratulations on your promotion and best wishes for your continued success as you serve the residents of the Village.

ATTACHMENTS:
None

VILLAGE OF ARLINGTON HEIGHTS
INC. 1887

Village Board of Trustees
2/17/2026

Item: Adoption of an Ordinance Amending Chapter 13 of the Village Code to Increase the Number of Class E Liquor Licenses to 14, Decrease the Number of Class B Liquor Licenses to 33, and Decrease the Number of Class T Liquor Licenses to 26; and Recommendation that the Liquor Commissioner Issue One Class E License to KAWAII ASIAN AMERICAN CUISINE dba KAWAII ASIAN CUISINE Located at 60 S. Arlington Heights Road

Department: Integrated Services

Item Description:

Recommendation that the Liquor Commissioner issue a Class E liquor license to KAWAII ASIAN AMERICAN CUISINE dba KAWAII ASIAN CUISINE located at 60 S. Arlington Heights Road. Class E liquor licenses will increase via ordinance from 13 total Class E licenses to 14 total Class E licenses upon favorable recommendation from the February 17, 2026, Committee of the Whole Meeting.

Recommendation that the Liquor Commissioner decrease the number of Class B liquor licenses to 33 and decrease the number of Class T liquor licenses to 26. Due to the closure of AMAZON RETAIL LLC dba AMAZON FRESH, the total number of Class B and T liquor licenses needs to be decreased. Village staff also conducted an audit on Class B and T liquor licenses and found that the total number of Class B licenses authorized in the Village Code was more than the actual number of active liquor businesses with a Class B license. Class B liquor licenses will decrease via ordinance from 35 total Class B licenses to 33 total Class B licenses, and Class T liquor licenses will decrease via ordinance from 27 total Class T licenses to 26 total Class T licenses.

ATTACHMENTS:

1. E Increase - B Decrease - T Decrease

AN ORDINANCE AMENDING CHAPTER 13 OF THE
ARLINGTON HEIGHTS MUNICIPAL CODE

BE IT ORDAINED BY THE PRESIDENT AND BOARD OF TRUSTEES OF THE VILLAGE OF ARLINGTON HEIGHTS:

SECTION ONE: That Section 13-502 of the Municipal Code of Arlington Heights, pertaining to the number of liquor licenses, is hereby amended to decrease the number of Class "B" liquor licenses authorized, increase the number of Class "E" liquor licenses authorized, and decrease the number of Class "T" liquor licenses authorized, with the amended entry for Class "B", "E", and "T" licenses to read as follows:

CLASS OF LICENSE	ANNUAL LICENSE FEE	NUMBER OF LICENSES AUTHORIZED
B	$3,700.00	33
E	$2,700.00	14
T	$0.00	26

SECTION TWO: This Ordinance shall be in full force and effect from and after its passage and approval in the manner provided by law.

AYES:

NAYS:

PASSED AND APPROVED this 17th day of February, 2026.

_____
Village President

ATTEST:

_____
Village Clerk

VILLAGE OF ARLINGTON HEIGHTS
INC. 1887

Village Board of Trustees
2/17/2026

Item: Resolution Approving a Contract for Carpet Replacement and Installation at Village Hall, Second Floor
Department: Public Works & Engineering

Item Description:
BACKGROUND
The 2026 Capital Improvement Plan identifies $225,000 for the next phase of carpet replacement at Village Hall. The carpet within Village Hall has been in place for 16 years and has reached a point where signs of wear, stains, and fading are becoming more evident. Regular maintenance and spot treatments have been insufficient to restore the carpet to an acceptable condition. As part of the comprehensive annual plan, staff intends to replace the carpeting throughout the IT Department, Engineering Division of the Public Works and Engineering Department, the Planning and Community Development Department, and the Commissions Room. This will improve the visual appearance and eliminate any potential safety issues as the existing carpets continue degrading due to daily use.

Staff has proposed and implemented a phased approach to carpet installation throughout the Village Hall. In 2024, all common area public walkways on levels two and three and the elevator vestibules were replaced. In 2025, all carpet in departments and meeting rooms on the 1st floor were replaced. Staff will complete all carpet replacements within the third-floor departments and meeting rooms in 2027, completing the program.

Competitive pricing has been secured through the Sourcewell cooperative purchasing program for this next phase of the carpet installation project. Sourcewell (formerly NJPA) is a joint purchasing cooperative similar to Northwest Municipal Conference (NWMC) that uses multiple government agencies and collaborative purchasing to obtain more competitive bid pricing.

The total cost of removing and installing carpet on the second floor of Village Hall is $203,781.81. Midway Flooring of Woodridge, Illinois, holds the Sourcewell bid award for carpet installation work. Staff has worked with Midway Flooring during the earlier phases of the Village Hall carpet replacement program and were satisfied with the outcome and the contractor's professionalism throughout the month-long project and has no concerns about using them again.

Funding is available in the 2026 Capital Improvement Fund Budget, Account No. 401-7101-550200 BL9505.

RECOMMENDATION

It is recommended that the Village Board award the Village Hall carpet and removal contract to Midway Flooring of Woodridge, Illinois, as authorized in the attached resolution.

ATTACHMENTS:

1. 20260217_Building_VHCarpetReplacement

VILLAGE OF ARLINGTON HEIGHTS

RESOLUTION NO. _____

A RESOLUTION AUTHORIZING THE PURCHASE AND INSTALLATION OF
VILLAGE HALL CARPET REPLACEMENT FROM MIDWAY FLOORING, OF WOODRIDGE, ILLINOIS

WHEREAS, Article VII, Section 10 of the Constitution of the State of Illinois, and the Intergovernmental Cooperation Act, 5 ILCS 220/1 et seq., authorize and encourage intergovernmental cooperation; and

WHEREAS, the Village is eligible to participate in Sourcewell, a purchasing cooperative that permits local governments to purchase and lease commodities and services according to contracts negotiated by Sourcewell, resulting in significant savings for the Village; and

WHEREAS, the Village Public Works and Engineering Department has identified the need to replace the carpet in the Village Hall (*"Project"*); and

WHEREAS, Sourcewell sought bids for the award of the contract for the purchase and installation of carpet for the project (*"Purchase Contract"*); and

WHEREAS, Sourcewell identified Midway Flooring, of Woodridge, Illinois (*"Midway"*), as the low responsible bidder for the Purchase Contract; and

WHEREAS, the Village President and Board of Trustees have determined that it will serve and be in the best interest of the Village to enter into the Purchase Contract with Midway, in a total amount not to exceed $203,781.81;

NOW, THEREFORE, BE IT RESOLVED BY THE PRESIDENT AND BOARD OF TRUSTEES OF THE VILLAGE OF ARLINGTON HEIGHTS, COOK COUNTY, ILLINOIS, as follows:

SECTION 1. RECITALS. The facts and statements contained in the preamble to this Resolution are found to be true and correct and are hereby adopted as part of this Resolution.

SECTION 2. APPROVAL OF PURCHASE CONTRACT. The President and Board of Trustees hereby approve the Purchase Contract with Midway, in a total amount not to exceed $203,781.81.

SECTION 3. EXECUTION OF REQUIRED DOCUMENTATION. The Village Manager and the Village Clerk are hereby authorized to execute and attest, on behalf of the Village, the Purchase Contract all necessary documents related thereto.

SECTION 4. EFFECTIVE DATE. This Resolution will be in full force and effect from and after its passage and approval as provided by law.

AYES:

NAYS:

PASSED AND APPROVED THIS ___ day of _____, 2026.

_____
Village President

ATTEST:

_____
Village Clerk

CLIENT	PROJECT
VILLAGE OF ARLINGTON HEIGHTS 222 N. RIDGE AVE ARLINGTON HEIGHTS, IL 60005	ARLINGTON HEIGHTS VILLAGE HALL 2ND FLOOR OFFICES 33 S ARLINGTON HEIGHTS RD ARLINGTON HEIGHTS, IL 60005

Proposal Letter Date	Job Contact	Salesperson 1	Job #
01/08/26		GLENN SUTKUS	

Area	Style/Item	Color/Desc	Qty		Price	Total
01. SERVICE	CARPET DEMOLITION (STANDARD)		1,300.00	SY	7.23	9,399.00
02. SERVICE	LVT/VCT DEMOLITION (STANDARD)		1,020.00	SF	2.49	2,539.80
03. SERVICE	REMOVAL AND DISPOSAL OF COVE BASE		2,994.00	LF	0.91	2,724.54
04. SERVICE	CARPET DISPOSAL		1,300.00	SY	3.40	4,420.00
05. SERVICE	LVT/VCT DISPOSAL		1,020.00	SF	2.36	2,407.20
06. SERVICE	SKIMCOAT - LABOR AND MATERIAL		11,700.00	SF	2.00	23,400.00
07. SERVICE	SKIMCOAT - LABOR AND MATERIAL (LVT REQUIRES TWO SKIMCOATS)		1,020.00	SF	3.06	3,121.20
08. CARPET TILE	PRIMARY CPT- SHAW CONTRACT- 5T183 SCULPT LOOP ECOWORX TILE	SWEPT 83322- 24" CARPET TILES	1,397.24	SY	62.42	87,215.72
09. CARPET TILE	INLAY CPT- SHAW- 5T261 BELONG ECOWORX TILE	GOLDEN 48211- 24" CARPET TILES	117.32	SY	44.76	5,251.24
10. ADHESIVE & SUNDRIES	N5000 LOKWORX+ CARPET TILE ADHESIVE	4 GALLON PAILS	15.00	EA	133.78	2,006.70
11. SERVICE	CARPET TILE INSTALLATION		1,300.00	SY	13.03	16,939.00
12. SERVICE	CARPET BORDER WORK		290.00	LF	5.67	1,644.30
13. HARD SURFACE	SHAW CONTRACT- 0215V JEOGORI	FIBER 90720- 18" VINYL TILES	1,116.16	SF	5.59	6,239.33
14. ADHESIVE & SUNDRIES	4151 PRESSURE SENSITIVE UNIVERSAL ADHESIVE	4 GALLON PAILS	2.00	EA	270.49	540.98

CLIENT	PROJECT
VILLAGE OF ARLINGTON HEIGHTS 222 N. RIDGE AVE ARLINGTON HEIGHTS, IL 60005	ARLINGTON HEIGHTS VILLAGE HALL 2ND FLOOR OFFICES 33 S ARLINGTON HEIGHTS RD ARLINGTON HEIGHTS, IL 60005

Proposal Letter Date	Job Contact	Salesperson 1	Job #
01/08/26		GLENN SUTKUS	

Area	Style/Item	Color/Desc	Qty		Price	Total
15. SERVICE	LVT INSTALLATION (NO PATTERN; EXCLUDES MATERIAL)		1,020.00	SF	5.19	5,293.80
16. ADHESIVE & SUNDRIES	169CA FINISHWORX WALL BASE 4" COVE LENGTH	47 BROWN	27.00	BX	133.78	3,612.06
17. SERVICE	4" VINYL BASE INSTALLATION (EXCLUDES MATERIALS)		2,995.00	LF	3.34	10,003.30
18. ADHESIVE & SUNDRIES	143VS TILE-CARPET REDUCER 1/8"		4.00	BX	92.24	368.96
19. SERVICE	TRANSITION INSTALLATION (EXCLUDES MATERIAL)		32.00	LF	6.13	196.16
20. SERVICE	FURNITURE REMOVAL & REPLACMENT		1,403.00	SY	10.84	15,208.52
21. SERVICE	HOURLY RATE FOR SERVICE NOT LISTED (DELIVERY TO JOBSITE)		10.00	HR	125.00	1,250.00
			2ND FLOOR Sub Total:			**203,781.81**

Total $203,781.81

CLIENT	PROJECT
VILLAGE OF ARLINGTON HEIGHTS 222 N. RIDGE AVE ARLINGTON HEIGHTS, IL 60005	ARLINGTON HEIGHTS VILLAGE HALL 2ND FLOOR OFFICES 33 S ARLINGTON HEIGHTS RD ARLINGTON HEIGHTS, IL 60005

Proposal Letter Date	Job Contact	Salesperson 1	Job #
01/08/26		GLENN SUTKUS	

Area	Style/Item	Color/Desc	Qty	Price	Total

Pricing is based on Shaw Sourcewell Contract Number 061323-SII
Active 11/07/25

Notes:

1. Labor figured as Prevailing Wage during standard daytime hours - No Overtime/Double Time included
2. Material quantities have been rounded to the full carton
3. Carpet Tiles/LVT to be glued directly to the floor surface – No underlayment or padding
4. Vinyl Straight base figured at all Carpet, Vinyl Cove base figured at all LVT
5. All material disposed into an owner supplied dumpster
6. Elevators, Stairs, Bathrooms, Utility Closets, Corridors, and Computer Room 287 are excluded from base bid
7. Inlay Carpet estimated per Walkthrough notes
8. **Due to volatile product pricing – This quote is only good for 30 Days**

Exclusions:

1. Extensive Floor Prep: Deep fills, Ramping, and Leveling
2. Haul away/dumpsters
3. Post/Final Cleanup – Wall wipe downs, Dusting, Vacuuming, Deep Cleaning, Waxing, and Buffing
4. Patching/repairing finishes
5. Attic stock
6. Moisture testing and mitigation

Total Proposal: $203,781.81

Total $203,781.81

CLIENT	PROJECT
VILLAGE OF ARLINGTON HEIGHTS 222 N. RIDGE AVE ARLINGTON HEIGHTS, IL 60005	ARLINGTON HEIGHTS VILLAGE HALL 2ND FLOOR OFFICES 33 S ARLINGTON HEIGHTS RD ARLINGTON HEIGHTS, IL 60005

Proposal Letter Date	Job Contact	Salesperson 1	Job #
01/08/26		GLENN SUTKUS	

Area	Style/Item	Color/Desc	Qty	Price	Total

Customer Approval:
Please sign and date your acceptance of this proposal.

_____ _____

Signature *Date of Acceptance*

Total $203,781.81

VILLAGE OF ARLINGTON HEIGHTS
INC. 1887

Village Board of Trustees
2/17/2026

Item: Resolution Approving the Final Plat of Subdivision for East Country Lane Townhomes 3310 N. Old Arlington Heights Rd.
Department: Planning & Community Development

Item Description:
Background
On April 21, 2025, the Village Board approved Resolution #25-068 authorizing a Preliminary Plat of Subdivision approval to consolidate the properties at 3310 & 3255 N. Old Arlington Heights Road. The Petitioner has prepared a Final Plat of Subdivision, which contains the necessary information as required by Chapter 29 of the Municipal Code for Final Plat of Subdivision approval. The Village has reviewed the Final Plat of Subdivision and verified that it is substantially compliant with the preliminary approvals as outlined in Resolution #25-068 and Section 4 of Ordinance #25-019 which outlines conditions for the subdivision approval granted for the East Country Lane Townhomes Planned Unit Development (PUD).

There were several conditions of approval within Ordinance #25-019 (PUD Approval) that have been addressed as part of the Final Plat of Subdivision review.

Recommendation
Adoption of a Resolution Approving the Final Plat of Subdivision to create a single 1.84-acre lot for development of 24 townhomes. subject to the following conditions:

1. Distribution Lines. The Applicant must place all original overhead distribution lines for telephone and electric service underground and remove the poles, in accordance with, and as required by, Chapter 29 of the Village Code.
2. Impact Fees. Prior to issuance of a building permit for the Property, the Owner must pay all impact fees associated with the development of the Property in accordance with, and as required by, Chapter 29 of the Village Code.

ATTACHMENTS:

1. AH Resolution Approving Final Plat of Subdivision for East Country Lane Townhomes
2. Memo_East Country Lane Townhomes_Final Plat
3. Final Plat of Subdivision - E Country Ln Townhomes
4. Exhibit A - Aerial
5. Exhibit B - Topographical Survey

VILLAGE OF ARLINGTON HEIGHTS

RESOLUTION NO. _____

A RESOLUTION APPROVING A FINAL PLAT OF SUBDIVISION
(3310 N. Old Arlington Heights Road)

WHEREAS, SFP Properties, LLC ("*Applicant*") is the contract purchaser of that certain property commonly known as 3310 N. Old Arlington Heights Road, Arlington Heights, Illinois (*"Property"*); and

WHEREAS, the Applicant desires to consolidate the Property into a single lot; and

WHEREAS, the Applicant filed applications with the Village for preliminary and final approval of a plat of subdivision consolidating the property into one lot pursuant to Sections 29-212 through 29-214 of the "Municipal Code of Arlington Heights, Illinois, 1995," as amended (*"Village Code"*); and

WHEREAS, on April 21, 2025, the President and Board of Trustees adopted Resolution No. 25-068, approving a preliminary plat of subdivision for the Property in accordance with all applicable Village procedures and requirements; and

WHEREAS, following approval by the President and Board of Trustees of the preliminary plat of subdivision, the Applicant submitted a final plat of subdivision that is substantially in accordance with the preliminary plat of subdivision; and

WHEREAS, on August 13, 2025, the Plan Commission of the Village of Arlington Heights (*"Plan Commission"*) recommended approval of the proposed final plat of subdivision, subject to specified development conditions; and

WHEREAS, having considered the findings and recommendations of the Plan Commission, the President and Board of Trustees have found and determined that it will serve and be in the best interest of the Village and its residents to approve the Final Plat of Subdivision for the Property;

NOW, THEREFORE, BE IT RESOLVED BY THE PRESIDENT AND BOARD OF TRUSTEES OF THE VILLAGE OF ARLINGTON HEIGHTS, COOK COUNTY, ILLINOIS, as follows:

SECTION 1. RECITALS. The facts and statements contained in the preamble to this Resolution are found to be true and correct and are hereby adopted as part of this Resolution.

SECTION 2. APPROVAL OF FINAL PLAT OF SUBDIVISION. Subject to, and contingent upon, the conditions, restrictions, and provisions set forth in Section 3 of this Resolution, that certain plat titled Final Plat of Subdivision East Country Lane Townhomes, prepared by United Survey Service, LLC, consisting of two sheets and dated June 18, 2025, a copy of which is attached to and, by this reference, made a part of this Resolution as Exhibit A ("*Final Plat of Subdivision*") is hereby approved as the final plat of subdivision for the Property pursuant to Section 29-214 of the Village Code and the home rule powers of the Village.

SECTION 3. CONDITIONS OF APPROVAL. Approval of the Final Plat of Subdivision in Section 2 of this Resolution is conditioned upon compliance with the following provisions, conditions, and restrictions:

A. Distribution Lines. The Applicant must place all original overhead distribution lines for telephone and electric service underground and remove the poles, in accordance with, and as required by, Chapter 29 of the Village Code.

B. Impact Fees. Prior to issuance of a building permit for the Property, the Owner must pay all impact fees associated with the development of the Property in accordance with, and as required by, Chapter 29 of the Village Code.

SECTION 4. EXECUTION OF FINAL PLAT OF SUBDIVISION. Upon satisfaction of the conditions set forth in Section 3 of this Resolution, the Village President and the Village Clerk are hereby authorized and directed to execute and seal, on behalf of the Village, the Final Plat of Subdivision.

SECTION 5. RECORDATION OF FINAL PLAT OF SUBDIVISION. Upon execution of the Final Plat of Subdivision by the Village President and the Village Clerk, as provided in Section 4 of this Resolution, the Village Clerk is directed to cause the Final Plat of Subdivision to be recorded on title to the Property in the office of the Cook County Clerk Recording Division.

SECTION 6. AMENDMENTS. Any substantive amendments to the Village-approved Final Plat of Subdivision will require an amendment to the planned unit development for the Property granted pursuant to Village Ordinance No. 2025-19. Minor amendments to the Village-approved Final Plat of Subdivision, such as non-material changes to the locations of easement areas, will not require an amendment to the planned unit development for the Property granted in Ordinance No. 2025-19.

SECTION 7. EFFECTIVE DATE. This Resolution will be in full force and effect from and after its passage and approval as provided by law. The approvals in Section 2 of this Resolution will be null and void in the event that all conditions are not satisfied within 180 days after the passage of this Resolution, unless that date is extended by the Village Board of Trustees.

AYES:

NAYS:

PASSED AND APPROVED THIS ___ day of _____, 2026

_____
Village President

ATTEST:

_____
Village Clerk

EXHIBIT A

FINAL PLAT OF SUBDIVISION

FINAL PLAT OF SUBDIVISION
EAST COUNTRY LANE TOWNHOMES

OF LOTS 15 AND 16 IN FREEDOM SMALL FARMS, BEING A SUBDIVISION IN THE NORTHWEST QUARTER OF THE NORTHWEST QUARTER AND THE NORTH HALF OF THE SOUTHWEST QUARTER OF THE NORTHWEST QUARTER OF SECTION 8, TOWNSHIP 42 NORTH, RANGE 11, EAST OF THE THIRD PRINCIPAL MERIDIAN, IN COOK COUNTY, ILLINOIS

KNOWN AS : **3310 N. ARLINGTON ROAD, ARLINGTON HEIGHTS, ILLINOIS**

COOK COUNTY PERMANENT IDENTIFICATION NUMBERS:
03 - 08 - 100 - 018 - 0000
03 - 08 - 100 - 019 - 0000

AREA SUMMARY

LOT 1
AREA = 79,998 SQ. FT. OR 1.836 ACRE
VACATED EASEMENT AREA = 2,000 SQ.FT

0' 15' 30' 60' 120'

SCALE: 1"=30'

MAIL PLAT TO :
VILLAGE OF ARLINGTON HEIGHTS
33 S. ARLINGTON HEIGHTS ROAD
ARLINGTON HEIGHTS, IL 60005

SEND TAX BILL TO :
SFP ARLINGTON HEIGHTS, LLC
3190 DOOLITTLE NORTHBROOK, IL 60062

LEGEND

- BOUNDARY LINE OF SUBDIVISION
- RIGHT-OF-WAY LINE
- TRAFFIC FLOW DIRECTIONAL'S
- EXISTING LOT LINE
- EASEMENT LINE
- BUILDING SETBACK
- BLANKET EASEMENT LIMIT
- LOT - PROPOSED LOT NUMBER
- LOT - EXISTING LOT NUMBER
- (M) - MEASURED
- (R) - RECORD
- (N.E.A.) - NON-EASEMENT AREA

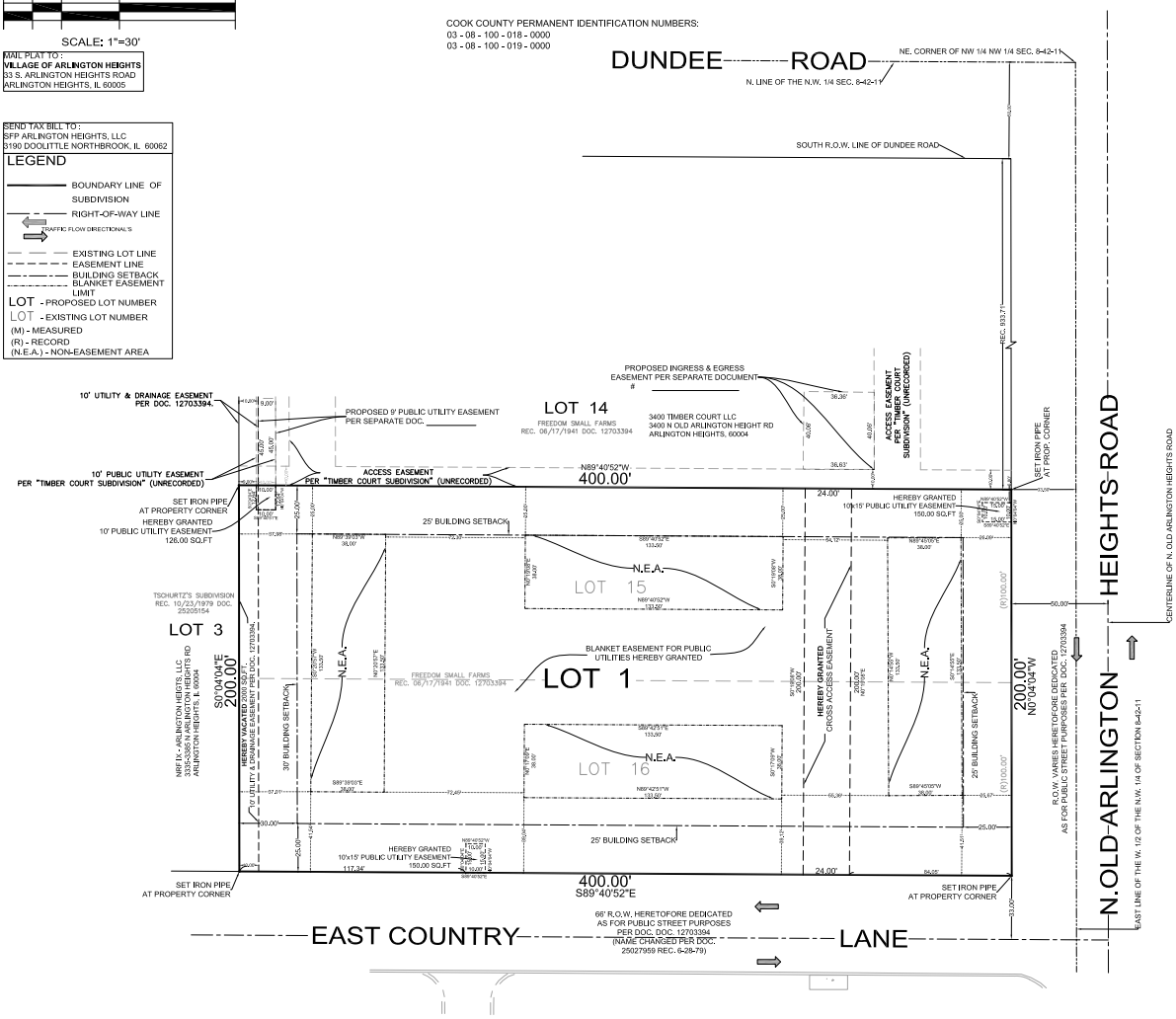

CROSS ACCESS EASEMENT PROVISIONS:
PROVISIONS COVERED UNDER AGREEMENT PER SEPARATE DOCUMENT.

EXISTING OWNER:
LOTS 15 & 16 IN FREEDOM SMALL FARMS - SFP ARLINGTON HEIGHTS, LLC

NOTE:
ALL OF LOT 1 (EXCEPT THE "NON-EASEMENT AREAS") IS A PUBLIC UTILITY EASEMENT IN ACCORDANCE WITH THE EASEMENT PROVISIONS ATTACHED

BUILDING SETBACK LINES:

NORTH PROPERTY LINE:
MINIMUM BUILDING SETBACK: 25 FEET FROM THE PROPERTY LINE.

EAST PROPERTY LINE:
MINIMUM BUILDING SETBACK: 25 FEET FROM THE PROPERTY LINE.

SOUTH PROPERTY LINE:
MINIMUM BUILDING SETBACK: 25 FEET FROM THE PROPERTY LINE.

WEST PROPERTY LINE:
MINIMUM BUILDING SETBACK: 30 FEET FROM THE PROPERTY LINE.

BUILDING RESTRICTIONS:
NO STRUCTURE MAY BE BUILT WITHIN THE DESIGNATED SETBACK AREAS AS OUTLINED ABOVE.

EASEMENT PROVISIONS

AN EASEMENT FOR SERVING THE SUBDIVISION AND OTHER PROPERTY WITH ELECTRIC AND COMMUNICATION SERVICE IS HEREBY RESERVED FOR AND GRANTED TO
COMMONWEALTH EDISON COMPANY
AND
SBC, A.K.A. ILLINOIS BELL TELEPHONE COMPANY, GRANTEES,
THEIR RESPECTIVE LICENSEES, SUCCESSORS AND ASSIGNS JOINTLY AND SEVERALLY, TO CONSTRUCT, OPERATE, REPAIR, MAINTAIN, MODIFY, RECONSTRUCT, REPLACE, SUPPLEMENT, RELOCATE AND REMOVE, FROM TIME TO TIME, POLE GUYS, ANCHORS, WIRES, CABLES, CONDUITS, MANHOLES, TRANSFORMERS, PEDESTALS, EQUIPMENT CABINETS OR OTHER FACILITIES USED IN CONNECTION WITH OVERHEAD AND UNDERGROUND TRANSMISSION AND DISTRIBUTION OF ELECTRICITY, COMMUNICATIONS, SOUNDS AND SIGNALS IN, OVER, UNDER, ACROSS, ALONG AND UPON THE SURFACE OF ALL OF LOT 1 (EXCEPT THE "NON-EASEMENT AREAS") AND THE PROPERTY SHOWN WITHIN THE DASHED OR DOTTED LINES (OR SIMILAR DESIGNATION) ON THE PLAT AND MARKED "EASEMENT", "UTILITY EASEMENT", "PUBLIC UTILITY EASEMENT", "P.U.E." (OR SIMILAR DESIGNATION), THE PROPERTY DESIGNATED IN THE DECLARATION OF CONDOMINIUM AND/OR ON THIS PLAT AS "COMMON ELEMENTS", AND THE PROPERTY DESIGNATED ON THE PLAT AS "COMMON AREA OR AREAS", AND THE PROPERTY DESIGNATED ON THE PLAT FOR STREETS AND ALLEYS, WHETHER PUBLIC OR PRIVATE, TOGETHER WITH THE RIGHTS TO INSTALL REQUIRED SERVICE CONNECTIONS OVER OR UNDER THE SURFACE OF EACH LOT AND COMMON AREA OR AREAS TO SERVE IMPROVEMENT THEREON, OR ON ADJACENT LOTS, AND COMMON AREA OR AREAS, THE RIGHT TO CUT, TRIM OR REMOVE TREES, BUSHES, ROOTS AND SAPLINGS AND TO CLEAR OBSTRUCTIONS FROM THE SURFACE AND SUBSURFACE AS MAY BE REASONABLY REQUIRED INCIDENT TO THE RIGHTS HEREIN GIVEN, AND THE RIGHT TO ENTER UPON THE SUBDIVIDED PROPERTY FOR ALL SUCH PURPOSES, OBSTRUCTIONS SHALL NOT BE PLACES OVER GRANTEES' FACILITIES OR IN, UPON OR OVER ALL OF LOT 1 (EXCEPT THE "NON-EASEMENT AREAS") AND THE PROPERTY WITHIN THE DASHED OR DOTTED LINES (OR SIMILAR DESIGNATION) MARKED "EASEMENT", "UTILITY EASEMENT", "PUBLIC UTILITY EASEMENT", "P.U.E." (OR SIMILAR DESIGNATION) WITHOUT THE PRIOR WRITTEN CONSENT OF GRANTEES, AFTER INSTALLATION OF ANY SUCH FACILITIES, THE GRADE OF THE SUBDIVIDED PROPERTY SHALL NOT BE ALTERED IN A MANNER SO AS TO INTERFERE WITH THE PROPER OPERATION AND MAINTENANCE THEREOF.
THE TERM "COMMON ELEMENTS" SHALL HAVE THE MEANING SET FORTH FOR SUCH TERM IN THE "CONDOMINIUM PROPERTY ACT", CHAPTER 765 ILCS 605/2(C), AS AMENDED FROM TIME TO TIME.
THE TERM "COMMON AREA OR AREAS" IS DEFINED AS A LOT, PARCEL OR AREA OF REAL PROPERTY, THE BENEFICIAL USE AND ENJOYMENT OF WHICH IS RESERVED IN WHOLE OR AS AN APPORTIONMENT TO THE SEPARATELY OWNED LOTS, PARCELS OR AREAS WITHIN THE PLANNED DEVELOPMENT, EVEN THOUGH SUCH BE OTHERWISE DESIGNATED ON THE PLAT BY TERMS SUCH AS "OUTLOTS", "COMMON ELEMENTS", "OPEN SPACE", "OPEN AREA", "COMMON GROUND", "PARKING" AND "COMMON AREA". THE TERM "COMMON AREA OR AREAS", AND "COMMON ELEMENTS" INCLUDE REAL PROPERTY SURFACED WITH INTERIOR DRIVEWAYS AND WALKWAYS, BUT EXCLUDES REAL PROPERTY PHYSICALLY OCCUPIED BY A BUILDING, SERVICE BUSINESS DISTRICT OR STRUCTURES SUCH AS A POOL, RETENTION POND OR MECHANICAL EQUIPMENT. RELOCATION OF FACILITIES WILL BE DONE BY GRANTEES AT COST OF THE GRANTOR/LOT OWNER, UPON WRITTEN REQUEST.

AN EASEMENT IS HEREBY GRANTED, ON THE SAME TERMS AND CONDITIONS AS THE EASEMENT GRANTED ABOVE, TO COMCAST, AND TO ASTOUND, DULY AUTHORIZED BY THE VILLAGE OF ARLINGTON HEIGHTS TO PROVIDE CABLE TELEVISION SERVICE.

AN EASEMENT IS HEREBY RESERVED FOR AND GRANTED TO NORTHERN ILLINOIS GAS COMPANY (NICOR GAS), ITS SUCCESSORS AND ASSIGNS, OVER ALL OF LOT 1 (EXCEPT THE "NON-EASEMENT AREAS") AND ALL PLATTED "EASEMENT" AREAS, STREETS, ALLEYS, OTHER PUBLIC WAYS AND PLACES SHOWN ON THIS PLAT, SAID EASEMENT TO BE FOR THE INSTALLATION, MAINTENANCE, RELOCATION, RENEWAL AND REMOVAL OF GAS MAINS AND APPURTENANCES FOR THE PURPOSE OF SERVING ALL AREAS SHOWN ON THIS PLAT AS WELL AS OTHER PROPERTY, WHETHER OR NOT CONTIGUOUS THERETO, NO BUILDINGS OR OTHER STRUCTURES SHALL BE CONSTRUCTED OR ERECTED IN ANY SUCH "EASEMENT" AREAS, STREETS, ALLEYS, OR OTHER PUBLIC WAYS OR PLACES NOR SHALL ANY OTHER USE BE MADE THEREOF WHICH WILL INTERFERE WITH THE EASEMENTS RESERVED AND GRANTED HEREBY.

COMMONWEALTH EDISON COMPANY
EASEMENT APPROVED AND ACCEPTED

BY: _____ DATE: _____ 20__

TITLE: _____

AMERITECH
EASEMENT APPROVED AND ACCEPTED

BY: _____ DATE: _____ 20__

TITLE: _____

NICOR GAS
EASEMENT APPROVED AND ACCEPTED

BY: _____ DATE: _____ 20__

TITLE: _____

COMCAST CABLE
EASEMENT APPROVED AND ACCEPTED

BY: _____ DATE: _____ 20__

TITLE: _____

ASTOUND
EASEMENT APPROVED AND ACCEPTED

BY: _____ DATE: _____ 20__

TITLE: _____

PROJECT No.: 2024-31499	PLAT PREPARED FOR & MAIL PLAT TO:	PLAT PREPARED BY:
ISSUE DATE: 10/9/24	SFP ARLINGTON HEIGHTS, LLC	UNITED SURVEY SERVICE, LLC
SCALE: 1"=30'	3190 DOOLITTLE NORTHBROOK, IL 60062	CONSTRUCTION AND LAND SURVEYORS
SHEET NUMBER 1 OF 2		7710 CENTRAL AVENUE, RIVER FOREST, ILLINOIS, 60305
		TEL.: (847) 299 - 1010 FAX : (847) 299 - 5887
		E-MAIL: USURVEY@USANDCS.COM

NO.	REVISIONS	DATE
1	REVISED	11-6-24
2	REVISED	12-18-24
3	REVISED	1-30-25
4	REVISED	2-25-25
5	REVISED	3-13-25
6	REVISED	6-18-25

SEND TAX BILL TO :
SFP ARLINGTON HEIGHTS, LLC
3190 DOOLITTLE NORTHBROOK, IL 60062

FINAL PLAT OF SUBDIVISION
EAST COUNTRY LANE TOWNHOMES

OF LOTS 15 AND 16 IN FREEDOM SMALL FARMS, BEING A SUBDIVISION IN THE NORTHWEST QUARTER OF THE NORTHWEST QUARTER AND THE NORTH HALF OF THE SOUTHWEST QUARTER OF THE NORTHWEST QUARTER OF SECTION 8, TOWNSHIP 42 NORTH, RANGE 11, EAST OF THE THIRD PRINCIPAL MERIDIAN, IN COOK COUNTY, ILLINOIS

KNOWN AS : **3310 N. ARLINGTON ROAD, ARLINGTON HEIGHTS, ILLINOIS**

COOK COUNTY PERMANENT IDENTIFICATION NUMBERS:
03 - 08 - 100 - 018 - 0000
03 - 08 - 100 - 019 - 0000

OWNER'S CERTIFICATE:

STATE OF ILLINOIS)
) S.S.
COUNTY OF COOK)
WE, THE UNDERSIGNED, SFP ARLINGTON HEIGHTS, LLC, OWNERS OF THE REAL ESTATE SHOWN AND DESCRIBED HEREIN, DO HEREBY LAY OFF, PLAT AND SUBDIVIDE SAID REAL ESTATE IN ACCORDANCE WITH THE WITHIN PLAT. THIS SUBDIVISION SHALL BE KNOWN AND DESIGNATED AS EAST COUNTRY LANE TOWNHOMES SUBDIVISION, AN ADDITION TO THE VILLAGE OF ARLINGTON HEIGHTS, COOK COUNTY. ALL STREETS AND ALLEYS AND PUBLIC OPEN SPACES SHOWN AND NOT HERETOFORE DEDICATED ARE HEREBY DEDICATED TO THE PUBLIC. FRONT AND SIDE YARD BUILDING SETBACK LINES ARE ESTABLISHED AS SHOWN ON THIS PLAT, BETWEEN WHICH LINES AND THE PROPERTY LINES OF THE STREETS, THERE SHALL BE ERECTED OR MAINTAINED NO BUILDING OR STRUCTURE.
ALL OF LOT 1, EXCEPT THOSE PARTS DESIGNATED NON-EASEMENT AREA, IS A "PUBLIC UTILITY EASEMENT" RESERVED FOR THE USE OF PUBLIC UTILITIES FOR THE INSTALLATION OF NATURAL GAS AND POLES DUCTS, LINES AND WIRES, ALL AS NECESSARY FOR THE ABOVE UTILITIES AND THOSE FOR COMMUNICATIONS AND ELECTRICAL POWER: SUBJECT AT ALL TIMES TO THE PROPER AUTHORITIES AND TO THE EASEMENT HEREIN RESERVED. NO PERMANENT STRUCTURES ARE TO BE ERECTED OR MAINTAINED UPON SAID PUBLIC UTILITY EASEMENT, BUT SUBSEQUENT OWNERS WITHIN THIS SUBDIVISION SHALL TAKE THEIR TITLES SUBJECT TO THE RIGHTS OF THE PUBLIC UTILITIES, AND TO THE RIGHTS OF THE OWNERS OF OTHER LOTS IN THIS SUBDIVISION.
THE FOREGOING COVENANTS (OR RESTRICTIONS), ARE TO RUN WITH THE LAND AND SHALL BE BINDING ON ALL PARTIES AND ALL PERSONS CLAIMING UNDER THEM UNTIL JANUARY 1, 2050, AT WHICH TIME SAID COVENANTS (OR RESTRICTIONS) SHALL BE AUTOMATICALLY EXTENDED FOR SUCCESSIVE PERIODS OF TEN YEARS UNLESS INDICATED OTHERWISE BY NEGATIVE VOTE OF A MAJORITY OF THE THEN OWNERS OF THE BUILDING SITES COVERED BY THESE COVENANTS (OR RESTRICTIONS), IN WHOLE OR IN PART, WHICH SAID VOTE WILL BE EVIDENCED BY A PETITION IN WRITING SIGNED BY THE OWNERS AND DULY RECORDED. INVALIDATION OF ANY ONE OF THE FOREGOING COVENANTS (OR RESTRICTIONS) BY JUDGMENT OR COURT ORDER SHALL IN NO WAY AFFECT ANY OF THE OTHER VARIOUS COVENANTS (OR RESTRICTIONS), WHICH SHALL REMAIN IN FULL FORCE AND EFFECT.
THE RIGHT TO ENFORCE THESE PROVISIONS BY INJUNCTION, TOGETHER WITH THE RIGHT TO CAUSE THE REMOVAL, BY DUE PROCESS OF LAW, OF ANY STRUCTURE OR PART THEREOF ERECTED OR MAINTAINED IN VIOLATION, IS HEREBY DEDICATED TO THE PUBLIC, AND RESERVED TO THE SEVERAL OWNERS OF THE SEVERAL LOTS IN THIS SUBDIVISION AND TO THEIR HEIRS AND ASSIGNS.

DATED THIS _____DAY OF _____, A.D. 20___.

BY:_____
OWNER'S SIGNATURE TITLE:

COMPANY NAME, AND ADDRESS:
SFP ARLINGTON HEIGHTS, LLC
3190 DOOLITTLE NORTHBROOK, IL 60062

NOTARY CERTIFICATE:

STATE OF ILLINOIS)
) S.S.
COUNTY OF COOK)

BEFORE ME THE UNDERSIGNED NOTARY PUBLIC, IN AND FOR THE COUNTY AND STATE AFORESAID, PERSONALLY APPEARED _____ AND EACH SEPARATELY AND SEVERALLY ACKNOWLEDGED THE EXECUTION OF THE FOREGOING INSTRUMENT AS HIS OR HER VOLUNTARY ACT AND DEED, FOR THE PURPOSES THEREIN EXPRESSED.

WITNESS MY HAND AND NOTARIAL SEAL THIS ___ DAY OF 20 _____.

BY:_____
NOTARY PUBLIC

COMMISSION EXPIRES_____

VILLAGE COLLECTOR CERTIFICATE:

STATE OF ILLINOIS)
) S.S.
COUNTY OF COOK)

I, _____, VILLAGE COLLECTOR FOR THE VILLAGE OF ARLINGTON HEIGHT, COOK COUNTY, ILLINOIS, DO HEREBY CERTIFY THAT I FIND NO DELINQUENT GENERAL TAXES, DELINQUENT SPECIAL ASSESSMENTS OR UNPAID CURRENT SPECIAL ASSESSMENTS DUE AGAINST THE LAND INCLUDED IN THE PLAN HEREON DRAWN.

DATED THIS_____ DAY OF_____, A.D. 20__.

APPROVED BY:_____
VILLAGE COLLECTOR

VILLAGE OFFICIALS:

STATE OF ILLINOIS)
) S.S.
COUNTY OF COOK)

UNDER THE AUTHORITY PROVIDED BY 65 ILCS 5/11-12 AS AMENDED BY THE STATE LEGISLATURE OF THE STATE OF ILLINOIS AND ORDINANCE ADOPTED BY THE VILLAGE BOARD OF THE VILLAGE OF ARLINGTON HEIGHTS, ILLINOIS, THIS PLAT WAS GIVEN APPROVAL BY THE VILLAGE OF ARLINGTON HEIGHTS AND MUST BE RECORDED WITHIN SIX MONTHS OF THE DATE OF APPROVAL BY THE VILLAGE BOARD, OTHERWISE IT IS NULL AND VOID.

APPROVED BY THE PLAN COMMISSION AT A MEETING HELD

_____

_____
CHAIRMAN

_____
SECRETARY

APPROVED BY THE VILLAGE OF BOARD OF TRUSTEES AT A MEETING HELD

_____

_____
PRESIDENT

_____
VILLAGE CLERK

APPROVED BY THE VILLAGE ENGINEER

_____

APPROVED BY THE VILLAGE COLLECTOR

_____

DRAINAGE STATEMENT:

TO THE BEST OF OUR KNOWLEDGE AND BELIEF, THE DRAINAGE OF THE SURFACE WATERS WILL NOT BE CHANGED BY THE CONSTRUCTION OF THIS SUBDIVISION OR ANY PART THEREOF, OR THAT IF SUCH SURFACE WATER DRAINAGE WILL BE CHANGED, REASONABLE PROVISIONS HAVE BEEN MADE FOR THE COLLECTION AND DIVERSION OF SUCH SURFACE WATERS INTO PUBLIC AREAS OR DRAINS WHICH THE SUBDIVIDER HAS A RIGHT TO USE, AND THAT SUCH SURFACE WATERS WILL BE PLANNED FOR IN ACCORDANCE WITH GENERALLY ACCEPTED ENGINEERING PRACTICES SO AS TO REDUCE THE LIKELIHOOD OF DAMAGE TO THE ADJOINING PROPERTY BECAUSE OF THE CONSTRUCTION OF THE SUBDIVISION.

DATED THIS _____DAY OF _____,A.D. 20__.

ADDRESS:
3310 N. OLD ARLINGTON ROAD., ARLINGTON HEIGHTS, ILLINOIS

BY:_____
OWNER

BY:_____
ENGINEER

CROSS ACCESS EASEMENT PROVISIONS:
PROVISIONS COVERED UNDER AGREEMENT PER SEPARATE DOCUMENT.

ILLINOIS DEPARTMENT OF TRANSPORTATION CERTIFICATE

THIS PLAT HAS BEEN APPROVED BY THE ILLINOIS DEPARTMENT OF TRANSPORTATION WITH RESPECT TO ROADWAY ACCESS PURSUANT OF §2 OF "AN ACT TO REVISE THE LAW IN RELATION TO PLATS," AS AMENDED. A PLAN THAT MEETS THE REQUIREMENTS CONTAINED IN THE DEPARTMENT'S "POLICY ON PERMITS FOR ACCESS DRIVEWAYS TO STATE HIGHWAYS" WILL BE REQUIRED BY THE DEPARTMENT.

_____
JOSE RIOS, P.E.
REGION ONE ENGINEER

SCHOOL DISTRICT CERTIFICATE:

STATE OF ILLINOIS)
) S.S.
COUNTY OF COOK)
WE, THE UNDERSIGNED, SFP ARLINGTON HEIGHTS, LLC, OWNERS OF THE REAL ESTATE SHOWN AND DESCRIBED HEREIN, DO HEREBY CERTIFY THAT THE PROPERTY HEREON DESCRIBED IS LOCATED WITHIN THE BOUNDARIES OF:
CONSOLIDATED COMMUNITY SCHOOL DISTRICT #25
TOWNSHIP HIGH SCHOOL DISTRICT #214
HARPER COMMUNITY COLLEGE DISTRICT #512

DATED THIS _____DAY OF _____, A.D. 20___.

BY:_____
OWNER'S SIGNATURE TITLE:

COMPANY NAME, AND ADDRESS:
SFP ARLINGTON HEIGHTS, LLC
3190 DOOLITTLE NORTHBROOK, IL 60062

NOTARY CERTIFICATE:

STATE OF ILLINOIS)
) S.S.
COUNTY OF COOK)

BEFORE ME THE UNDERSIGNED NOTARY PUBLIC, IN AND FOR THE COUNTY AND STATE AFORESAID, PERSONALLY APPEARED _____

_____, AND EACH SEPARATELY AND SEVERALLY ACKNOWLEDGED THE EXECUTION OF THE FOREGOING INSTRUMENT AS HIS OR HER VOLUNTARY ACT AND DEED, FOR THE PURPOSES THEREIN EXPRESSED.

WITNESS MY HAND AND NOTARIAL SEAL THIS ___ DAY OF 20_____.

BY:_____
NOTARY PUBLIC

COMMISSION EXPIRES_____

COUNTY CLERK'S CERTIFICATE:

STATE OF ILLINOIS)
) S.S.
COUNTY OF COOK)

I, _____ COUNTY CLERK OF COOK COUNTY, ILLINOIS, DO HEREBY CERTIFY THAT THERE ARE NO DELINQUENT GENERAL TAXES, NO UNPAID CURRENT TAXES, NO UNPAID FORFEITED TAXES, AND NO REDEEMABLE TAX SALES AGAINST ANY OF THE LAND INCLUDED IN THE ANNEXED PLAT.

I FURTHER CERTIFY THAT I HAVE RECEIVED ALL STATUTORY FEES IN CONNECTION WITH THE ANNEXED PLAT.

DATED THIS_____ DAY _____,A.D. 20___.

BY:_____
COUNTY CLERK

SURVEYOR'S CERTIFICATE:

STATE OF ILLINOIS)
) S.S.
COUNTY OF COOK)

I, **ROY G. LAWNICZAK**, HEREBY CERTIFY THAT I AM AN ILLINOIS REGISTERED LAND SURVEYOR IN COMPLIANCE WITH THE LAWS OF THE STATE OF ILLINOIS, AND THIS PLAT CORRECTLY REPRESENTS A SURVEY COMPLETED BY ME ON OCTOBER 9, 2024; THAT ALL MONUMENTS AND MARKERS SHOWN THEREON ACTUALLY EXIST, AND THAT I HAVE ACCURATELY SHOWN THE MATERIALS THAT THEY ARE MADE OF.

I DO HEREBY FURTHER CERTIFY THAT I HAVE SURVEYED AND SUBDIVIDED THE FOLLOWING DESCRIBED PROPERTY:
LOTS 15 AND 16 IN FREEDOM SMALL FARMS, BEING A SUBDIVISION IN THE NORTHWEST QUARTER OF THE NORTHWEST QUARTER AND THE NORTH HALF OF THE SOUTHWEST QUARTER OF THE NORTHWEST QUARTER OF SECTION 8, TOWNSHIP 42 NORTH, RANGE 11, EAST OF THE THIRD PRINCIPAL MERIDIAN, AND MORE PARTICULARLY DESCRIBED AS FOLLOWS: BEGINNING AT THE SOUTHEAST CORNER OF SAID LOT 15, THENCE NORTH 00 DEGREES 04 MINUTES 04 SECONDS WEST, A DISTANCE OF 200.00 FEET; THENCE NORTH 89 DEGREES 40 MINUTES 42 SECONDS WEST, A DISTANCE OF 400.00 FEET; THENCE SOUTH 00 DEGREES 04 MINUTES 04 SECONDS EAST, A DISTANCE OF 200.00 FEET; THENCE SOUTH 89 DEGREES 40 MINUTES 52 SECONDS EAST, A DISTANCE OF 400.00 FEET TO THE POINT OF BEGINNING IN COOK COUNTY, ILLINOIS

I DO HEREBY FURTHER CERTIFY THAT THE LAND INCLUDED IN THIS PLAT IS ENTIRELY SITUATED WITHIN THE CORPORATE LIMITS OF THE VILLAGE OF ARLINGTON HEIGHTS, COOK COUNTY, ILLINOIS.

I DO HEREBY CERTIFY THAT ALL DIMENSIONS SHOWN HEREON ARE IN FEET AND DECIMAL PARTS THEREOF AND ARE CORRECTED TO A TEMPERATURE OF 68 DEGREES FAHRENHEIT.

I DO HEREBY CERTIFY THAT THE ZONING CLASSIFICATION FOR THE SUBJECT PROPERTY IS M-1 - RESEARCH, DEVELOPMENT AND LIGHT MANUFACTURING DISTRICT PER ARLINGTON HEIGHTS ZONING MAP CREATED 4/12/2024.

I FURTHER CERTIFY THAT THE SUBJECT PROPERTY IS LOCATED WITHIN AN AREA HAVING A ZONE DESIGNATION **"X" -** AREAS DETERMINED TO BE OUTSIDE THE 0.2% ANNUAL CHANCE FLOODPLAIN ON FLOOD INSURANCE RATE MAP **17031 C 0063 J**, WITH A DATE OF IDENTIFICATION OF **AUGUST 19, 2008**, COOK COUNTY, STATE OF ILLINOIS, WHICH IS THE CURRENT FLOOD INSURANCE RATE MAP FOR THE COMMUNITY IN WHICH SAID PROPERTY IS SITUATED.

THIS PROFESSIONAL SERVICE CONFORMS TO THE CURRENT ILLINOIS MINIMUM STANDARDS FOR A BOUNDARY SURVEY.

THE BASIS OF BEARINGS SHOWN HEREON ARE BASED UPON THE ILLINOIS STATE PLANE COORDINATE SYSTEM, EAST ZONE.

I FURTHER CERTIFY THAT MONUMENTS DESIGNATED IRON PIPES AND / OR CONCRETE MONUMENTS ON THIS PLAT HAVE BEEN SET AT ALL LOT CORNERS.

THIS PLAT OF CONSOLIDATION IS DRAWN TO THE SCALE OF ONE INCH PER 30 FEET.

GIVEN UNDER MY HAND AND SEAL THIS 13TH DAY OF MARCH, 2025 AT RIVER FOREST, ILLINOIS.

ROY G. LAWNICZAK 35-002290 PROFESSIONAL LAND SURVEYOR STATE OF ILLINOIS CHICAGO, IL

BY:_____
ROY G. LAWNICZAK, REGISTERED ILLINOIS LAND SURVEYOR NO. 35-2290
LICENSE EXPIRES: NOVEMBER 30, 2026
PROFESSIONAL DESIGN FIRM LICENSE NO.: 184-004576
LICENSE EXPIRES: APRIL 30, 2027

PROJECT No.: 2024-31499	PLAT PREPARED FOR & MAIL PLAT TO: SFP ARLINGTON HEIGHTS, LLC 3190 DOOLITTLE NORTHBROOK, IL 60062	PLAT PREPARED BY: UNITED SURVEY SERVICE, LLC CONSTRUCTION AND LAND SURVEYORS 7710 CENTRAL AVENUE, RIVER FOREST, ILLINOIS, 60305 TEL.: (847) 299 - 1010 FAX : (847) 299 - 5887 E-MAIL: USURVEY@USANDCS.COM	NO.	REVISIONS	DATE
ISSUE DATE: 10/9/24			1	REVISED	11-6-24
SCALE: 1"=30'			2	REVISED	12-20-24
SHEET NUMBER 2 OF 2			3	REVISED	1-30-25
			4	REVISED	2-25-25
			5	REVISED	3-13-25
			6	REVISED	6-18-25

VILLAGE OF ARLINGTON HEIGHTS
INC. 1887

Date: August 6, 2025

To: Arlington Heights Plan Commission

From: Dan Osoba, Planner I

Re: PC 24-015: East Country Lane Townhomes – Final Plat of Subdivision for Plan Commission Meeting on August 13, 2025

Background:

On April 21, 2025, the Village Board approved Resolution #25-068 authorizing a Preliminary Plat of Subdivision approval to consolidate the properties at 3310 & 3255 N. Old Arlington Heights Road. The Petitioner has prepared a Final Plat of Subdivision, which contains the necessary information as required by Chapter 29 of the Municipal Code for Final Plat of Subdivision approval. The Village has reviewed the Final Plat of Subdivision and verified that it is substantially compliant with the preliminary approvals as outlined in Resolution #25-068 and Section 4 of Ordinance #25-019 which outlines conditions for the subdivision approval granted for the East Country Lane Townhomes Planned Unit Development (PUD).

There were several conditions of approval within Ordinance #25-019 (PUD Approval) that needed to be addressed as part of the Final Plat of Subdivision review. A general description of these conditions is outlined below:

- Compliance with Plans. Except for minor changes and site work approved by the Village Director of Building & Life Safety (for matters within their permitting authority) in accordance with all applicable Village standards, the development, use, operation, and maintenance of the Proposed Development and of the Property must be substantially compliant with the Preliminary Plat of Subdivision.
    - The Staff Development Committee (SDC) reviewed the Petitioner's Final Plat of Subdivision and found that it is substantial compliance with the Preliminary Plat of Subdivision.

- Cross-Access Easement. The Applicant must negotiate in good faith, and take all practicable steps to complete and execute, a reciprocal cross-access easement with the property located adjacent to, and immediately north of, the Property, located at 3400 N. Old Arlington Heights Road and known as the Timber Court development.
    - The Petitioner has provided communication to demonstrate attempts to negotiate a reciprocal cross-access easement with the property owner of the Timber Court development, but has not been successful at executing a cross-access easement. The Petitioner has provided a cross-access easement from E. Country Lane to the northern property line as required by the Village. A reciprocal cross-access easement is required to be provided by the Timber Court development pursuant to Section 4 of Ordinance #05-048 which states, "1. A cross-access easement shall be required along the south property line and shall be effectuated at such time when the properties to the south develop."

- Curb Cuts. The Applicant must remove the depressed curb cuts and existing apron on the Property and replace them with full head curb cuts, and restore the parkways with topsoil and seed or sod.
    - The Final Engineering plans submitted by the Petitioner show the depressed curb cuts and existing apron to be removed and restored in compliance with this condition.

- Required Fees. The Applicant must pay to the Village all fees required pursuant to Chapter 29 of the Municipal Code of Arlington Heights, Illinois, 1995, as amended (*"Village Code"*).
    - The petitioner has been informed of this requirement and has been provided all fees that will be due at time of Village Board approval and Building Permit.

- Linkage Fees. The Applicant must pay to the Village linkage fees in accordance with Chapter 7 of the Village Code and the approval of the Affordable Housing Plan by the Housing Commission on November 20, 2024, a copy of which is attached to and, by this reference, made a part of this Ordinance as Exhibit J, at the time of building permit issuance.
    - The petitioner has been informed of this requirement and has been provided all fees that will be due at time of Building Permit.

Recommendation: The Staff Development Committee recommends **APPROVAL** of the Final Plat of Subdivision, subject to the following condition:

1. Per Village of Arlington Heights Municipal Code, Chapter 29, Section 501.j, all original overhead distribution lines for telephone and electric service shall be placed underground and the poles removed.
2. Prior to issuance of a Certificates of Occupancy for any dwelling on the subject property, the Petitioner shall provide an executed snow removal agreement to the Village for review and approval.
3. The Property Owner shall agree to indefinitely provide snow removal service that shall haul snow off-site as necessary such that snow storage does not occur outside of designated snow storage zones as shown on the Snow Storage and Removal Plan prepared by Pearson, Brown & Associates, Inc. with latest revision date of 7/29/2025.
4. The Petitioner shall submit to the Village a Plat of Easement for an off-site utility easement to be recorded prior to the issuance of any building permits.
5. Payment of all applicable engineering fees and the provision of all surety bonds, public improvement deposits, and maintenance guarantees (as required under Chapter 29 of the Village Code) must be provided one week prior to the Village Board approval.
6. Linkage fees, in accordance with Chapter 7 of the Municipal Code and the approval of the Affordable Housing Plan by the Housing Commission on November 20, 2024, shall be required at time of building permit issuance.
7. The Petitioner must comply with all of the requirements set forth in the September 24, 2024 motion of the Village's Design Commission concerning the approval of the design for the townhome buildings.
8. The Petitioner will provide a Final Plat, as approved by the Plan Commission, printed on mylar and submitted to the Village, with signature obtained from all parties except those to be coordinated by the Village, no less than one week prior to Village Board approval.
9. Payment of all anticipated cash contributions in lieu of land dedication for library, park and recreational purposes, and school sites to serve the immediate and future needs of the residents be provided at time of building permit.

FINAL PLAT OF SUBDIVISION
EAST COUNTRY LANE TOWNHOMES

OF LOTS 15 AND 16 IN FREEDOM SMALL FARMS, BEING A SUBDIVISION IN THE NORTHWEST QUARTER OF THE NORTHWEST QUARTER AND THE NORTH HALF OF THE SOUTHWEST QUARTER OF THE NORTHWEST QUARTER OF SECTION 8, TOWNSHIP 42 NORTH, RANGE 11, EAST OF THE THIRD PRINCIPAL MERIDIAN, IN COOK COUNTY, ILLINOIS

KNOWN AS : **3310 N. ARLINGTON ROAD, ARLINGTON HEIGHTS, ILLINOIS**

COOK COUNTY PERMANENT IDENTIFICATION NUMBERS:
03 - 08 - 100 - 018 - 0000
03 - 08 - 100 - 019 - 0000

AREA SUMMARY

LOT 1 AREA = 79,998 SQ. FT. OR 1.836 ACRE
VACATED EASEMENT AREA = 2,000 SQ.FT

0' 15' 30' 60' 120'

SCALE: 1"=30'

MAIL PLAT TO :
VILLAGE OF ARLINGTON HEIGHTS
33 S. ARLINGTON HEIGHTS ROAD
ARLINGTON HEIGHTS, IL 60005

SEND TAX BILL TO :
SFP ARLINGTON HEIGHTS, LLC
3190 DOOLITTLE NORTHBROOK, IL 60062

LEGEND

- BOUNDARY LINE OF SUBDIVISION
- RIGHT-OF-WAY LINE
- TRAFFIC FLOW DIRECTIONAL'S
- EXISTING LOT LINE
- EASEMENT LINE
- BUILDING SETBACK
- BLANKET EASEMENT LIMIT
- LOT - PROPOSED LOT NUMBER
- LOT - EXISTING LOT NUMBER
- (M) - MEASURED
- (R) - RECORD
- (N.E.A.) - NON-EASEMENT AREA

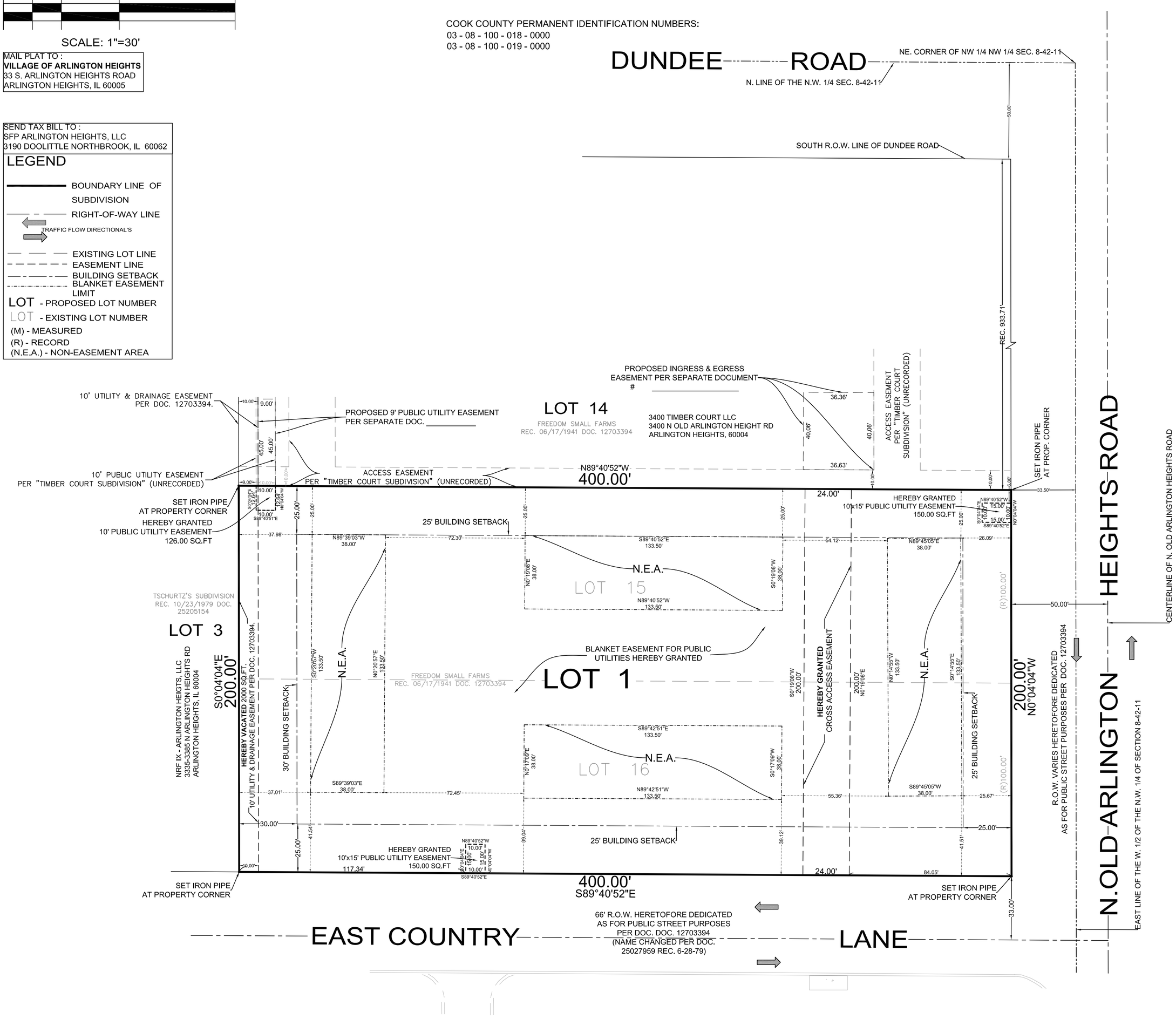

CROSS ACCESS EASEMENT PROVISIONS:
PROVISIONS COVERED UNDER AGREEMENT PER SEPARATE DOCUMENT.

EXISTING OWNER:
LOTS 15 & 16 IN FREEDOM SMALL FARMS - SFP ARLINGTON HEIGHTS, LLC

NOTE:
ALL OF LOT 1 (EXCEPT THE "NON-EASEMENT AREAS") IS A PUBLIC UTILITY EASEMENT IN ACCORDANCE WITH THE EASEMENT PROVISIONS ATTACHED

BUILDING SETBACK LINES:

NORTH PROPERTY LINE:
MINIMUM BUILDING SETBACK: 25 FEET FROM THE PROPERTY LINE.

EAST PROPERTY LINE:
MINIMUM BUILDING SETBACK: 25 FEET FROM THE PROPERTY LINE.

SOUTH PROPERTY LINE:
MINIMUM BUILDING SETBACK: 25 FEET FROM THE PROPERTY LINE.

WEST PROPERTY LINE:
MINIMUM BUILDING SETBACK: 30 FEET FROM THE PROPERTY LINE.

BUILDING RESTRICTIONS:
NO STRUCTURE MAY BE BUILT WITHIN THE DESIGNATED SETBACK AREAS AS OUTLINED ABOVE.

EASEMENT PROVISIONS

AN EASEMENT FOR SERVING THE SUBDIVISION AND OTHER PROPERTY WITH ELECTRIC AND COMMUNICATION SERVICE IS HEREBY RESERVED FOR AND GRANTED TO
COMMONWEALTH EDISON COMPANY
AND
SBC, A.K.A. ILLINOIS BELL TELEPHONE COMPANY, GRANTEES,
THEIR RESPECTIVE LICENSEES, SUCCESSORS AND ASSIGNS JOINTLY AND SEVERALLY, TO CONSTRUCT, OPERATE, REPAIR, MAINTAIN, MODIFY, RECONSTRUCT, REPLACE, SUPPLEMENT, RELOCATE AND REMOVE, FROM TIME TO TIME, POLE GUYS, ANCHORS, WIRES, CABLES, CONDUITS, MANHOLES, TRANSFORMERS, PEDESTALS, EQUIPMENT CABINETS OR OTHER FACILITIES USED IN CONNECTION WITH OVERHEAD AND UNDERGROUND TRANSMISSION AND DISTRIBUTION OF ELECTRICITY, COMMUNICATIONS, SOUNDS AND SIGNALS IN, OVER, UNDER, ACROSS, ALONG AND UPON THE SURFACE OF ALL OF LOT 1 (EXCEPT THE "NON-EASEMENT AREAS") AND THE PROPERTY SHOWN WITHIN THE DASHED OR DOTTED LINES (OR SIMILAR DESIGNATION) ON THE PLAT AND MARKED "EASEMENT", "UTILITY EASEMENT", "PUBLIC UTILITY EASEMENT", "P.U.E." (OR SIMILAR DESIGNATION), THE PROPERTY DESIGNATED IN THE DECLARATION OF CONDOMINIUM AND/OR ON THIS PLAT AS "COMMON ELEMENTS", AND THE PROPERTY DESIGNATED ON THE PLAT AS "COMMON AREA OR AREAS", AND THE PROPERTY DESIGNATED ON THE PLAT FOR STREETS AND ALLEYS, WHETHER PUBLIC OR PRIVATE, TOGETHER WITH THE RIGHTS TO INSTALL REQUIRED SERVICE CONNECTIONS OVER OR UNDER THE SURFACE OF EACH LOT AND COMMON AREA OR AREAS TO SERVE IMPROVEMENT THEREON, OR ON ADJACENT LOTS, AND COMMON AREA OR AREAS, THE RIGHT TO CUT, TRIM OR REMOVE TREES, BUSHES, ROOTS AND SAPLINGS AND TO CLEAR OBSTRUCTIONS FROM THE SURFACE AND SUBSURFACE AS MAY BE REASONABLY REQUIRED INCIDENT TO THE RIGHTS HEREIN GIVEN, AND THE RIGHT TO ENTER UPON THE SUBDIVIDED PROPERTY FOR ALL SUCH PURPOSES. OBSTRUCTIONS SHALL NOT BE PLACES OVER GRANTEES' FACILITIES OR IN, UPON OR OVER ALL OF LOT 1 (EXCEPT THE "NON-EASEMENT AREAS") AND THE PROPERTY WITHIN THE DASHED OR DOTTED LINES (OR SIMILAR DESIGNATION) MARKED "EASEMENT", "UTILITY EASEMENT", "PUBLLC UTILITY EASEMENT", "P.U.E.' (OR SIMILAR DESIGNATION) WITHOUT THE PRIOR WRITTEN CONSENT OF GRANTEES. AFTER INSTALLATION OF ANY SUCH FACILITIES, THE GRADE OF THE SUBDIVIDED PROPERTY SHALL NOT BE ALTERED IN A MANNER SO AS TO INTERFERE WITH THE PROPER OPERATION AND MAINTENANCE THEREOF.
THE TERM "COMMON ELEMENTS" SHALL HAVE THE MEANING SET FORTH FOR SUCH TERM IN THE "CONDOMINIUM PROPERTY ACT", CHAPTER 765 ILCS 605/2(C), AS AMENDED FROM TIME TO TIME.
THE TERM "COMMON AREA OR AREAS" IS DEFINED AS A LOT, PARCEL OR AREA OF REAL PROPERTY, THE BENEFICIAL USE AND ENJOYMENT OF WHICH IS RESERVED IN WHOLE OR AS AN APPORTIONMENT TO THE SEPARATELY OWNED LOTS, PARCELS OR AREAS WITHIN THE PLANNED DEVELOPMENT, EVEN THOUGH SUCH BE OTHERWISE DESIGNATED ON THE PLAT BY TERMS SUCH AS "OUTLOTS", "COMMON ELEMENTS", "OPEN SPACE", "OPEN AREA", "COMMON GROUND", "PARKING" AND "COMMON AREA". THE TERM "COMMON AREA OR AREAS", AND "COMMON ELEMENTS" INCLUDE REAL PROPERTY SURFACED WITH INTERIOR DRIVEWAYS AND WALKWAYS, BUT EXCLUDES REAL PROPERTY PHYSICALLY OCCUPIED BY A BUILDING, SERVICE BUSINESS DISTRICT OR STRUCTURES SUCH AS A POOL, RETENTION POND OR MECHANICAL EQUIPMENT. RELOCATION OF FACILITIES WILL BE DONE BY GRANTEES AT COST OF THE GRANTOR/LOT OWNER, UPON WRITTEN REQUEST.

AN EASEMENT IS HEREBY GRANTED, ON THE SAME TERMS AND CONDITIONS AS THE EASEMENT GRANTED ABOVE, TO COMCAST, AND TO ASTOUND, DULY AUTHORIZED BY THE VILLAGE OF ARLINGTON HEIGHTS TO PROVIDE CABLE TELEVISION SERVICE.

AN EASEMENT IS HEREBY RESERVED FOR AND GRANTED TO NORTHERN ILLINOIS GAS COMPANY (NICOR GAS), ITS SUCCESSORS AND ASSIGNS, OVER ALL OF LOT 1 (EXCEPT THE "NON-EASEMENT AREAS") AND ALL PLATTED "EASEMENT" AREAS, STREETS, ALLEYS, OTHER PUBLIC WAYS AND PLACES SHOWN ON THIS PLAT, SAID EASEMENT TO BE FOR THE INSTALLATION, MAINTENANCE, RELOCATION, RENEWAL AND REMOVAL OF GAS MAINS AND APPURTENANCES FOR THE PURPOSE OF SERVING ALL AREAS SHOWN ON THIS PLAT AS WELL AS OTHER PROPERTY, WHETHER OR NOT CONTIGUOUS THERETO. NO BUILDINGS OR OTHER STRUCTURES SHALL BE CONSTRUCTED OR ERECTED IN ANY SUCH "EASEMENT" AREAS, STREETS, ALLEYS, OR OTHER PUBLIC WAYS OR PLACES NOR SHALL ANY OTHER USE BE MADE THEREOF WHICH WILL INTERFERE WITH THE EASEMENTS RESERVED AND GRANTED HEREBY.

COMMONWEALTH EDISON COMPANY
EASEMENT APPROVED AND ACCEPTED

BY: _____ DATE: _____, 20___

TITLE: _____

AMERITECH
EASEMENT APPROVED AND ACCEPTED

BY: _____ DATE: _____, 20___

TITLE: _____

NICOR GAS
EASEMENT APPROVED AND ACCEPTED

BY: _____ DATE: _____, 20___

TITLE: _____

COMCAST CABLE
EASEMENT APPROVED AND ACCEPTED

BY: _____ DATE: _____, 20___

TITLE: _____

ASTOUND
EASEMENT APPROVED AND ACCEPTED

BY: _____ DATE: _____, 20___

TITLE: _____

PROJECT No.: 2024-31499	PLAT PREPARED FOR & MAIL PLAT TO: SFP ARLINGTON HEIGHTS, LLC 3190 DOOLITTLE NORTHBROOK, IL 60062	PLAT PREPARED BY: UNITED SURVEY SERVICE, LLC CONSTRUCTION AND LAND SURVEYORS 7710 CENTRAL AVENUE, RIVER FOREST, ILLINOIS, 60305 TEL.: (847) 299 - 1010 FAX : (847) 299 - 5887 E-MAIL: USURVEY@USANDCS.COM	NO.	REVISIONS	DATE
ISSUE DATE: 10/9/24			1	REVISED	11-6-24
SCALE: 1"=30'			2	REVISED	12-18-24
SHEET NUMBER 1 OF 2			3	REVISED	1-30-25
			4	REVISED	2-25-25
			5	REVISED	3-13-25
			6	REVISED	6-18-25

SEND TAX BILL TO :
SFP ARLINGTON HEIGHTS, LLC
3190 DOOLITTLE NORTHBROOK, IL 60062

FINAL PLAT OF SUBDIVISION
EAST COUNTRY LANE TOWNHOMES

OF LOTS 15 AND 16 IN FREEDOM SMALL FARMS, BEING A SUBDIVISION IN THE NORTHWEST QUARTER OF THE NORTHWEST QUARTER AND THE NORTH HALF OF THE SOUTHWEST QUARTER OF THE NORTHWEST QUARTER OF SECTION 8, TOWNSHIP 42 NORTH, RANGE 11, EAST OF THE THIRD PRINCIPAL MERIDIAN, IN COOK COUNTY, ILLINOIS

KNOWN AS : **3310 N. ARLINGTON ROAD, ARLINGTON HEIGHTS, ILLINOIS**

COOK COUNTY PERMANENT IDENTIFICATION NUMBERS:
03 - 08 - 100 - 018 - 0000
03 - 08 - 100 - 019 - 0000

OWNER'S CERTIFICATE:

STATE OF ILLINOIS)
) S.S.
COUNTY OF COOK)
WE, THE UNDERSIGNED, SFP ARLINGTON HEIGHTS, LLC, OWNERS OF THE REAL ESTATE SHOWN AND DESCRIBED HEREIN, DO HEREBY LAY OFF, PLAT AND SUBDIVIDE SAID REAL ESTATE IN ACCORDANCE WITH THE WITHIN PLAT. THIS SUBDIVISION SHALL BE KNOWN AND DESIGNATED AS EAST COUNTRY LANE TOWNHOMES SUBDIVISION, AN ADDITION TO THE VILLAGE OF ARLINGTON HEIGHTS, COOK COUNTY. ALL STREETS AND ALLEYS AND PUBLIC OPEN SPACES SHOWN AND NOT HERETOFORE DEDICATED ARE HEREBY DEDICATED TO THE PUBLIC. FRONT AND SIDE YARD BUILDING SETBACK LINES ARE ESTABLISHED AS SHOWN ON THIS PLAT, BETWEEN WHICH LINES AND THE PROPERTY LINES OF THE STREETS, THERE SHALL BE ERECTED OR MAINTAINED NO BUILDING OR STRUCTURE.
ALL OF LOT 1, EXCEPT THOSE PARTS DESIGNATED NON-EASEMENT AREA, IS A "PUBLIC UTILITY EASEMENT" RESERVED FOR THE USE OF PUBLIC UTILITIES FOR THE INSTALLATION OF NATURAL GAS AND POLES DUCTS, LINES AND WIRES, ALL AS NECESSARY FOR THE ABOVE UTILITIES AND THOSE FOR COMMUNICATIONS AND ELECTRICAL POWER; SUBJECT AT ALL TIMES TO THE PROPER AUTHORITIES AND TO THE EASEMENT HEREIN RESERVED. NO PERMANENT STRUCTURES ARE TO BE ERECTED OR MAINTAINED UPON SAID PUBLIC UTILITY EASEMENT, BUT SUBSEQUENT OWNERS WITHIN THIS SUBDIVISION SHALL TAKE THEIR TITLES SUBJECT TO THE RIGHTS OF THE PUBLIC UTILITIES, AND TO THE RIGHTS OF THE OWNERS OF OTHER LOTS IN THIS SUBDIVISION.
THE FOREGOING COVENANTS (OR RESTRICTIONS), ARE TO RUN WITH THE LAND AND SHALL BE BINDING ON ALL PARTIES AND ALL PERSONS CLAIMING UNDER THEM UNTIL JANUARY 1, 2050, AT WHICH TIME SAID COVENANTS (OR RESTRICTIONS) SHALL BE AUTOMATICALLY EXTENDED FOR SUCCESSIVE PERIODS OF TEN YEARS UNLESS INDICATED OTHERWISE BY NEGATIVE VOTE OF A MAJORITY OF THE THEN OWNERS OF THE BUILDING SITES COVERED BY THESE COVENANTS (OR RESTRICTIONS), IN WHOLE OR IN PART, WHICH SAID VOTE WILL BE EVIDENCED BY A PETITION IN WRITING SIGNED BY THE OWNERS AND DULY RECORDED. INVALIDATION OF ANY ONE OF THE FOREGOING COVENANTS (OR RESTRICTIONS) BY JUDGMENT OR COURT ORDER SHALL IN NO WAY AFFECT ANY OF THE OTHER VARIOUS COVENANTS (OR RESTRICTIONS), WHICH SHALL REMAIN IN FULL FORCE AND EFFECT.
THE RIGHT TO ENFORCE THESE PROVISIONS BY INJUNCTION, TOGETHER WITH THE RIGHT TO CAUSE THE REMOVAL, BY DUE PROCESS OF LAW, OF ANY STRUCTURE OR PART THEREOF ERECTED OR MAINTAINED IN VIOLATION, IS HEREBY DEDICATED TO THE PUBLIC, AND RESERVED TO THE SEVERAL OWNERS OF THE SEVERAL LOTS IN THIS SUBDIVISION AND TO THEIR HEIRS AND ASSIGNS.

DATED THIS _____DAY OF _____, A.D. 20___.

BY:_____
OWNER'S SIGNATURE TITLE:

COMPANY NAME, AND ADDRESS:
SFP ARLINGTON HEIGHTS, LLC
3190 DOOLITTLE NORTHBROOK, IL 60062

NOTARY CERTIFICATE:

STATE OF ILLINOIS)
) S.S.
COUNTY OF COOK)

BEFORE ME THE UNDERSIGNED NOTARY PUBLIC, IN AND FOR THE COUNTY AND STATE AFORESAID, PERSONALLY APPEARED _____
_____, AND EACH SEPARATELY AND SEVERALLY ACKNOWLEDGED THE EXECUTION OF THE FOREGOING INSTRUMENT AS HIS OR HER VOLUNTARY ACT AND DEED, FOR THE PURPOSES THEREIN EXPRESSED.

WITNESS MY HAND AND NOTARIAL SEAL THIS ___ DAY OF 20 _____.

BY:_____
NOTARY PUBLIC

COMMISSION EXPIRES_____

SCHOOL DISTRICT CERTIFICATE:

STATE OF ILLINOIS)
) S.S.
COUNTY OF COOK)
WE, THE UNDERSIGNED, SFP ARLINGTON HEIGHTS, LLC, OWNERS OF THE REAL ESTATE SHOWN AND DESCRIBED HEREIN, DO HEREBY CERTIFY THAT THE PROPERTY HEREON DESCRIBED IS LOCATED WITHIN THE BOUNDARIES OF:
CONSOLIDATED COMMUNITY SCHOOL DISTRICT #25
TOWNSHIP HIGH SCHOOL DISTRICT #214
HARPER COMMUNITY COLLEGE DISTRICT #512

DATED THIS _____DAY OF _____, A.D. 20___.

BY:_____
OWNER'S SIGNATURE TITLE:

COMPANY NAME, AND ADDRESS:
SFP ARLINGTON HEIGHTS, LLC
3190 DOOLITTLE NORTHBROOK, IL 60062

NOTARY CERTIFICATE:

STATE OF ILLINOIS)
) S.S.
COUNTY OF COOK)

BEFORE ME THE UNDERSIGNED NOTARY PUBLIC, IN AND FOR THE COUNTY AND STATE AFORESAID, PERSONALLY APPEARED _____
_____, AND EACH SEPARATELY AND SEVERALLY ACKNOWLEDGED THE EXECUTION OF THE FOREGOING INSTRUMENT AS HIS OR HER VOLUNTARY ACT AND DEED, FOR THE PURPOSES THEREIN EXPRESSED.

WITNESS MY HAND AND NOTARIAL SEAL THIS ___ DAY OF 20_____.

BY:_____
NOTARY PUBLIC

COMMISSION EXPIRES_____

VILLAGE COLLECTOR CERTIFICATE:

STATE OF ILLINOIS)
) S.S.
COUNTY OF COOK)

I, _____, VILLAGE COLLECTOR FOR THE VILLAGE OF ARLINGTON HEIGHT, COOK COUNTY, ILLINOIS, DO HEREBY CERTIFY THAT I FIND NO DELINQUENT GENERAL TAXES, DELINQUENT SPECIAL ASSESSMENTS OR UNPAID CURRENT SPECIAL ASSESSMENTS DUE AGAINST THE LAND INCLUDED IN THE PLAN HEREON DRAWN.

DATED THIS_____ DAY OF_____, A.D. 20__.

APPROVED BY:_____
VILLAGE COLLECTOR

VILLAGE OFFICIALS:

STATE OF ILLINOIS)
) S.S.
COUNTY OF COOK)

UNDER THE AUTHORITY PROVIDED BY 65 ILCS 5/11-12 AS AMENDED BY THE STATE LEGISLATURE OF THE STATE OF ILLINOIS AND ORDINANCE ADOPTED BY THE VILLAGE BOARD OF THE VILLAGE OF ARLINGTON HEIGHTS, ILLINOIS, THIS PLAT WAS GIVEN APPROVAL BY THE VILLAGE OF ARLINGTON HEIGHTS AND MUST BE RECORDED WITHIN SIX MONTHS OF THE DATE OF APPROVAL BY THE VILLAGE BOARD, OTHERWISE IT IS NULL AND VOID.

APPROVED BY THE PLAN COMMISSION AT A MEETING HELD

_____

_____
CHAIRMAN

_____
SECRETARY

APPROVED BY THE VILLAGE OF BOARD OF TRUSTEES AT A MEETING HELD

_____

_____
PRESIDENT

_____
VILLAGE CLERK

APPROVED BY THE VILLAGE ENGINEER

_____

APPROVED BY THE VILLAGE COLLECTOR

_____

COUNTY CLERK'S CERTIFICATE:

STATE OF ILLINOIS)
) S.S.
COUNTY OF COOK)

I, _____, COUNTY CLERK OF COOK COUNTY, ILLINOIS, DO HEREBY CERTIFY THAT THERE ARE NO DELINQUENT GENERAL TAXES, NO UNPAID CURRENT TAXES, NO UNPAID FORFEITED TAXES, AND NO REDEEMABLE TAX SALES AGAINST ANY OF THE LAND INCLUDED IN THE ANNEXED PLAT.

I FURTHER CERTIFY THAT I HAVE RECEIVED ALL STATUTORY FEES IN CONNECTION WITH THE ANNEXED PLAT.

DATED THIS_____ DAY _____,A.D. 20___.

BY:_____
COUNTY CLERK

DRAINAGE STATEMENT:

TO THE BEST OF OUR KNOWLEDGE AND BELIEF, THE DRAINAGE OF THE SURFACE WATERS WILL NOT BE CHANGED BY THE CONSTRUCTION OF THIS SUBDIVISION OR ANY PART THEREOF, OR THAT IF SUCH SURFACE WATER DRAINAGE WILL BE CHANGED, REASONABLE PROVISIONS HAVE BEEN MADE FOR THE COLLECTION AND DIVERSION OF SUCH SURFACE WATERS INTO PUBLIC AREAS OR DRAINS WHICH THE SUBDIVIDER HAS A RIGHT TO USE, AND THAT SUCH SURFACE WATERS WILL BE PLANNED FOR IN ACCORDANCE WITH GENERALLY ACCEPTED ENGINEERING PRACTICES SO AS TO REDUCE THE LIKELIHOOD OF DAMAGE TO THE ADJOINING PROPERTY BECAUSE OF THE CONSTRUCTION OF THE SUBDIVISION.

DATED THIS _____DAY OF _____,A.D. 20__.

ADDRESS:
3310 N. OLD ARLINGTON ROAD,, ARLINGTON HEIGHTS, ILLINOIS

BY:_____
OWNER

BY:_____
ENGINEER

CROSS ACCESS EASEMENT PROVISIONS:
PROVISIONS COVERED UNDER AGREEMENT PER SEPARATE DOCUMENT.

ILLINOIS DEPARTMENT OF TRANSPORTATION CERTIFICATE

THIS PLAT HAS BEEN APPROVED BY THE ILLINOIS DEPARTMENT OF TRANSPORTATION WITH RESPECT TO ROADWAY ACCESS PURSUANT OF §2 OF "AN ACT TO REVISE THE LAW IN RELATION TO PLATS," AS AMENDED. A PLAN THAT MEETS THE REQUIREMENTS CONTAINED IN THE DEPARTMENT'S "POLICY ON PERMITS FOR ACCESS DRIVEWAYS TO STATE HIGHWAYS" WILL, BE REQUIRED BY THE DEPARTMENT.

_____
JOSE RIOS, P.E.
REGION ONE ENGINEER

SURVEYOR'S CERTIFICATE:

STATE OF ILLINOIS)
) S.S.
COUNTY OF COOK)

I, **ROY G. LAWNICZAK**, HEREBY CERTIFY THAT I AM AN ILLINOIS REGISTERED LAND SURVEYOR IN COMPLIANCE WITH THE LAWS OF THE STATE OF ILLINOIS, AND THIS PLAT CORRECTLY REPRESENTS A SURVEY COMPLETED BY ME ON OCTOBER 9, 2024; THAT ALL MONUMENTS AND MARKERS SHOWN THEREON ACTUALLY EXIST, AND THAT I HAVE ACCURATELY SHOWN THE MATERIALS THAT THEY ARE MADE OF.

I DO HEREBY FURTHER CERTIFY THAT I HAVE SURVEYED AND SUBDIVIDED THE FOLLOWING DESCRIBED PROPERTY:
LOTS 15 AND 16 IN FREEDOM SMALL FARMS, BEING A SUBDIVISION IN THE NORTHWEST QUARTER OF THE NORTHWEST QUARTER AND THE NORTH HALF OF THE SOUTHWEST QUARTER OF THE NORTHWEST QUARTER OF SECTION 8, TOWNSHIP 42 NORTH, RANGE 11, EAST OF THE THIRD PRINCIPAL MERIDIAN, AND MORE PARTICULARLY DESCRIBED AS FOLLOWS: BEGINNING AT THE SOUTHEAST CORNER OF SAID LOT 15, THENCE NORTH 00 DEGREES 04 MINUTES 04 SECONDS WEST, A DISTANCE OF 200.00 FEET; THENCE NORTH 89 DEGREES 40 MINUTES 42 SECONDS WEST, A DISTANCE OF 400.00 FEET; THENCE SOUTH 00 DEGREES 04 MINUTES 04 SECONDS EAST, A DISTANCE OF 200.00 FEET; THENCE SOUTH 89 DEGREES 40 MINUTES 52 SECONDS EAST, A DISTANCE OF 400.00 FEET TO THE POINT OF BEGINNING IN COOK COUNTY, ILLINOIS

I DO HEREBY FURTHER CERTIFY THAT THE LAND INCLUDED IN THIS PLAT IS ENTIRELY SITUATED WITHIN THE CORPORATE LIMITS OF THE VILLAGE OF ARLINGTON HEIGHTS, COOK COUNTY, ILLINOIS.

I DO HEREBY CERTIFY THAT ALL DIMENSIONS SHOWN HEREON ARE IN FEET AND DECIMAL PARTS THEREOF AND ARE CORRECTED TO A TEMPERATURE OF 68 DEGREES FAHRENHEIT.

I DO HEREBY CERTIFY THAT THE ZONING CLASSIFICATION FOR THE SUBJECT PROPERTY IS M-1 - RESEARCH, DEVELOPMENT AND LIGHT MANUFACTURING DISTRICT PER ARLINGTON HEIGHTS ZONING MAP CREATED 4/12/2024.

I FURTHER CERTIFY THAT THE SUBJECT PROPERTY IS LOCATED WITHIN AN AREA HAVING A ZONE DESIGNATION **"X" -** AREAS DETERMINED TO BE OUTSIDE THE 0.2% ANNUAL CHANCE FLOODPLAIN ON FLOOD INSURANCE RATE MAP **17031 C 0063 J,** WITH A DATE OF IDENTIFICATION OF **AUGUST 19, 2008**, COOK COUNTY, STATE OF ILLINOIS, WHICH IS THE CURRENT FLOOD INSURANCE RATE MAP FOR THE COMMUNITY IN WHICH SAID PROPERTY IS SITUATED.

THIS PROFESSIONAL SERVICE CONFORMS TO THE CURRENT ILLINOIS MINIMUM STANDARDS FOR A BOUNDARY SURVEY.

THE BASIS OF BEARINGS SHOWN HEREON ARE BASED UPON THE ILLINOIS STATE PLANE COORDINATE SYSTEM, EAST ZONE.

I FURTHER CERTIFY THAT MONUMENTS DESIGNATED IRON PIPES AND / OR CONCRETE MONUMENTS ON THIS PLAT HAVE BEEN SET AT ALL LOT CORNERS.

THIS PLAT OF CONSOLIDATION IS DRAWN TO THE SCALE OF ONE INCH PER 30 FEET.

GIVEN UNDER MY HAND AND SEAL THIS 13TH DAY OF MARCH, 2025 AT RIVER FOREST, ILLINOIS.

ROY G. LAWNICZAK
35-002290
PROFESSIONAL LAND SURVEYOR
STATE OF ILLINOIS
CHICAGO, IL

BY:_____
ROY G. LAWNICZAK, REGISTERED ILLINOIS LAND SURVEYOR NO. 35-2290
LICENSE EXPIRES: NOVEMBER 30, 2026
PROFESSIONAL DESIGN FIRM LICENSE NO.: 184-004576
LICENSE EXPIRES: APRIL 30, 2027

PROJECT No.: 2024-31499	PLAT PREPARED FOR & MAIL PLAT TO:	PLAT PREPARED BY:	NO.	REVISIONS	DATE
ISSUE DATE: 10/9/24	SFP ARLINGTON HEIGHTS, LLC	UNITED SURVEY SERVICE, LLC	1	REVISED	11-6-24
SCALE: 1"=30'	3190 DOOLITTLE NORTHBROOK, IL 60062	CONSTRUCTION AND LAND SURVEYORS	2	REVISED	12-20-24
SHEET NUMBER 2 OF 2		7710 CENTRAL AVENUE, RIVER FOREST, ILLINOIS, 60305	3	REVISED	1-30-25
		TEL.: (847) 299 - 1010 FAX : (847) 299 - 5887	4	REVISED	2-25-25
		E-MAIL: USURVEY@USANDCS.COM	5	REVISED	3-13-25
			6	REVISED	6-18-25

GISConsortium | Aerial

Legend

0 500 1000 ft

Print Date: 10/22/2021

Notes

Disclaimer: The GIS Consortium and MGP Inc. are not liable for any use, misuse, modification or disclosure of any map provided under applicable law. This map is for general information purposes only. Although the information is believed to be generally accurate, errors may exist and the user should independently confirm for accuracy. The map does not constitute a regulatory determination and is not a base for engineering design. A Registered Land Surveyor should be consulted to determine precise location boundaries on the ground.

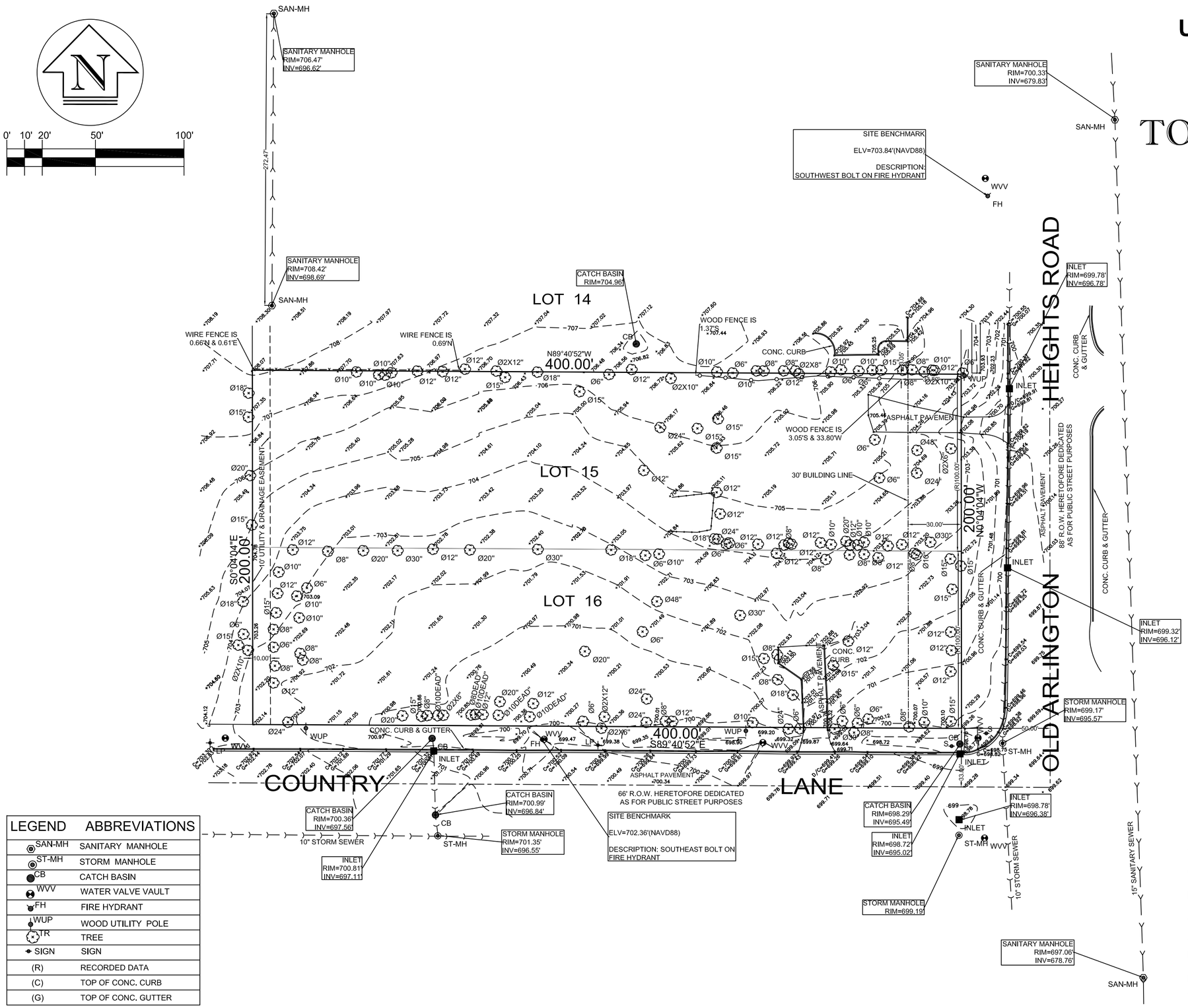

UNITED SURVEY SERVICE, LLC

CONSTRUCTION AND LAND SURVEYORS
7710 CENTRAL AVENUE, RIVER FOREST, IL 60305
TEL.: (847) 299 - 1010 FAX : (847) 299 - 5887
E-MAIL: USURVEY@USANDCS.COM

BOUNDARY AND TOPOGRAPHIC SURVEY

OF

PARCEL 1
LOT 15 IN FREEDOM SMALL FARMS, BEING A SUBDIVISION IN THE NORTHWEST QUARTER OF THE NORTHWEST QUARTER AND THE NORTH HALF OF THE SOUTHWEST QUARTER OF THE NORTHWEST QUARTER OF SECTION 8, TOWNSHIP 42 NORTH, RANGE 11, EAST OF THE THIRD PRINCIPAL MERIDIAN, IN COOK COUNTY, ILLINOIS

PARCEL 2
LOT 16 IN FREEDOM SMALL FARMS, BEING A SUBDIVISION IN THE NORTHWEST QUARTER IF THE NORTHWEST QUARTER AND THE NORTH HALF OF THE SOUTHWEST QUARTER OF THE NORTHWEST QUARTER OF SECTION 8, TOWNSHIP 42 NORTH, RANGE 11, EAST OF THE THIRD PRINCIPAL MERIDIAN, IN COOK COUNTY, ILLINOIS.

KNOWN AS: **3255-3310 N. OLD ARLINGTON HEIGHTS ROAD, ARLINGTON HEIGHTS, ILLINOIS**

PERMANENT INDEX NUMBER:
03 - 08 - 100 - 018 - 0000
03 - 08 - 100 - 019 - 0000

NOTE: ELEVATIONS HAVE BEEN DETERMINED BY GPS METHOD

PUBLIC UTILITY NOTE:
LOCATION OF UNDERGROUND UTILITIES WHERE NOT SUBSTANTIATED BY PHYSICAL EVIDENCE ARE TAKEN FROM RECORDS NORMALLY CONSIDERED RELIABLE. NO RESPONSIBILITY FOR THEIR ACCURACY IS ASSUMED BY THE SURVEYOR.

CONTRACTOR SHALL NOTIFY ALL PUBLIC UTILITY COMPANIES (GAS, ELECTRIC, TELEPHONE, SEWER AND WATER, ETC.) PRIOR TO COMMENCING ANY CONSTRUCTION.

THESE COMPANIES WILL LOCATE ON THE GROUND THE LOCATION OF ALL CONDUIT, DUCTS, UNDERGROUND PIPING, ETC., ADJOINING AND CROSSING PROPOSED CONSTRUCTION.

CALL JULIE TOLL FREE 1-800-892-0123

LEGEND	ABBREVIATIONS
SAN-MH	SANITARY MANHOLE
ST-MH	STORM MANHOLE
CB	CATCH BASIN
WVV	WATER VALVE VAULT
FH	FIRE HYDRANT
WUP	WOOD UTILITY POLE
TR	TREE
SIGN	SIGN
(R)	RECORDED DATA
(C)	TOP OF CONC. CURB
(G)	TOP OF CONC. GUTTER

ORDERED BY: CORNER SITE	
SCALE : 1" = 40'	
DATE :MARCH 30, 2024	
FILE No.: 2024 - 31499	
	DATE / REVISION

STATE OF ILLINOIS)
) S.S.
COUNTY OF COOK)

I, ROY G. LAWNICZAK, DO HEREBY CERTIFY THAT I HAVE SURVEYED THE ABOVE DESCRIBED PROPERTY AND THAT THE PLAT HEREON DRAWN IS A CORRECT REPRESENTATION OF SAID SURVEY.

THIS PROFESSIONAL SERVICE CONFORMS TO THE CURRENT ILLINOIS MINIMUM STANDARDS FOR A BOUNDARY SURVEY.

DIMENSIONS ARE SHOWN IN FEET AND DECIMALS AND ARE CORRECTED TO A TEMPERATURE OF 68° FAHRENHEIT.

COMPARE THIS PLAT, LEGAL DESCRIPTION AND ALL SURVEY MONUMENTS BEFORE BUILDING, AND IMMEDIATELY REPORT ANY DISCREPANCIES TO THE SURVEYOR.

RIVER FOREST, ILLINOIS, MARCH 30 , A.D. 2024.

ROY G. LAWNICZAK 35-002290 PROFESSIONAL LAND SURVEYOR STATE OF ILLINOIS CHICAGO, IL

BY: Roy G. Lawniczak

ROY G. LAWNICZAK, REGISTERED ILLINOIS LAND SURVEYOR NO. 35-2290
LICENSE EXPIRES: NOVEMBER 30, 2024
PROFESSIONAL DESIGN FIRM LICENSE NO.: 184-004576
LICENSE EXPIRES: APRIL 30, 2025

VILLAGE OF ARLINGTON HEIGHTS
INC. 1887

Village Board of Trustees
2/17/2026

Item: Resolution Approving a Contract for Concrete Flatwork Extension

Department: Public Works & Engineering

Item Description:

BACKGROUND

The 2026 Operating Budget includes $603,000, split between the Public Works and Engineering General Fund and the Water and Sewer Fund for contractual Concrete Flatwork, and $100,000 in the Capital Improvement Plan for downtown sidewalk improvements. The contract for Concrete Flatwork generally includes unit prices and procedures for restoration/construction related to street, driveway apron, sidewalk, curb, and catch basin concrete work. Unit prices also include traffic control and tree grate installation.

Bids for the Concrete Flatwork were advertised and publicly opened on March 3, 2025. This MPI bid was jointly bid for the Villages of Arlington Heights and Gurnee. The duration of the contract is proposed as a one-year initial term with the option to extend with five one-year extensions. Staff has been satisfied with the quality of work provided by Schroeder & Schroeder Inc.

Staff is requesting approval for the first of five possible one-year contract extensions. This extension would begin in February 2025 and end in December 2025, at which time, Staff will seek new pricing. The contractor has offered to extend the contract with a price increase of 2.5%, which is within contract terms.

While the total costs are dependent on the actual quantities used, Public Works and Engineering expenditures will not exceed the total budgeted amounts in the current fiscal year.

Funds are available for these services in Account Nos. 101-7101-521150 ($238,000), 505-7201-521300 ($265,000) and 401-7101-550300 ST0501 ($100,000).

RECOMMENDATION

It is recommended that the Village Board approve the attached resolution to award a one-year contract extension for Concrete Flatwork services to Schroeder & Schroeder Inc. of Skokie, Illinois, and the requested increase in accordance with the original contract terms, and authorize the execution of the necessary documents.

ATTACHMENTS:

1. 20260217_Streets_ConcreteFlatwork_Attachment

VILLAGE OF ARLINGTON HEIGHTS

RESOLUTION NO. _____

A RESOLUTION APPROVING THE RENEWAL OF A CONTRACT
WITH SCHROEDER & SCHROEDER INC., OF SKOKIE, ILLINOIS,
FOR THE CONCRETE FLATWORK SERVICES

WHEREAS, on March 17, 2025, the Village entered into a contract with Schroeder & Schroeder Inc., of Skokie, Illinois (*"Contractor"*), for the Concrete Flatwork Services (*"Contract"*); and

WHEREAS, the Contract allows the Village and the Contractor to renew the Contract for up to five additional one-year terms; and

WHEREAS, the Village and the Contractor now desire to renew the Contract for the first additional one-year term, for a twelve-month period; and

WHEREAS, the Village President and Board of Trustees have determined that renewing the Contract with the Contractor will serve and be in the best interest of the Village and its residents;

NOW, THEREFORE, BE IT RESOLVED BY THE PRESIDENT AND BOARD OF TRUSTEES OF THE VILLAGE OF ARLINGTON HEIGHTS, COOK COUNTY, ILLINOIS, as follows:

SECTION 1. RECITALS. The facts and statements contained in the preamble to this Resolution are found to be true and correct and are hereby adopted as part of this Resolution.

SECTION 2. APPROVAL OF RENEWAL. The Board of Trustees hereby approves the renewal of the Contract in substantially the form attached to this Resolution as Exhibit A (*"Renewal"*), and in a final form and substance acceptable to the Village Manager and Village Attorney.

SECTION 3. EXECUTION OF RENEWAL. The Village Manager and the Village Clerk are hereby authorized and directed to execute and attest, on behalf of the Village, the Renewal of the Contract upon receipt by the Village Clerk of at least one original copy of the Renewal of the Contract executed by Contractor; provided, however, that if the executed copy of the Renewal of the Contract is not received by the Village Clerk within 30 days after the effective date of this Resolution, then this authority to execute and attest will, at the option of the President and Board of Trustees, be null and void.

SECTION 4. EFFECTIVE DATE. This Resolution will be in full force and effect from and after its passage and approval as provided by law.

[SIGNATURE PAGE FOLLOWS]

AYES:

NAYS:

PASSED AND APPROVED THIS ___ day of _____, 20__.

_____
Village President

ATTEST:

_____
Village Clerk

EXHIBIT A

RENEWAL

Schroeder & Schroeder Inc.
CONCRETE CONTRACTORS
7306 CENTRAL PARK - SKOKIE, ILLINOIS 60076
PHONE 847-933-0526 - FAX 847-933-0528

January 13, 2026

Village of Arlington Heights
Public Works and Engineering Department
33 South Arlington Heights Road,
Arlington Heights, IL 60005
Attn: Dave Scanlon, Street Unit Crew Chief

RE: Village of Arlington Heights Concrete Flatwork Program – 2026 Contract Renewal

Dear Mr. Scanlon:

Pursuant with "Specifications" Article 2 - *Term of Contract*, Schroeder & Schroeder, Inc. would like to express its interest in extending the contract for the Village of Arlington Heights Concrete Flatwork Program into 2026.

Based on current economic inflation factors, the actual cost increase of labor and materials realized in 2025 followed typical annual escalation averages based on historical trends. Per the Consumer Price Index for All Urban Consumers (CPI-U) for Chicago-Naperville-Elgin, as published by the U.S. Bureau of Labor Statistics, the inflation rate increased 2.5% over the previous twelve-month period ending in November 2025. Accordingly, Schroeder & Schroeder, Inc. proposes renewing the contract with the Village at a 2.5% price increase for 2026.

If the Village of Arlington Heights has mutual interest in renewing the contract for 2026, please let us know formally so we can lock in pricing with our vendors and coordinate the applicable documentation.

It was our pleasure to service your concrete needs in 2025 and we look forward to another season of the same.

Sincerely,

Andrew Joiner
Chief Estimator / Senior Project Manager
Schroeder & Schroeder, Inc.

VILLAGE OF ARLINGTON HEIGHTS
INC. 1887

Village Board of Trustees
2/17/2026

Item: Resolution Approving the Renewal of Material Testing Services Contract

Department: Public Works & Engineering

Item Description:

BACKGROUND

The Public Works and Engineering Department contracts for material testing services in support of the Village's Street programs, sidewalk improvements, and other public infrastructure projects. The scope of services includes, but is not limited to, concrete and asphalt material inspections, coring operations, laboratory testing, and related construction quality assurance services.

In February 2023, the Village solicited Requests for Proposals from qualified firms to provide material testing services for a three-year term from January 1, 2023 through December 31, 2025, with the option to renew the contract annually for up to three additional years at the Village's sole discretion. Proposals were received from six (6) qualified firms and were evaluated based on qualifications and cost.

Construction & Geotechnical Material Testing, Inc. (CGMT) was selected and awarded the original three-year contract. The initial contract term expired on December 31, 2025. Throughout the contract term, staff has been satisfied with CGMT's performance, responsiveness, and quality of work. CGMT has confirmed that there will be no increase in fees or unit rates, consistent with the original contract terms.

Staff is requesting Village Board approval of a one-year contract extension with CGMT for material testing services associated with the Village's 2026 street, sidewalk, and maintenance projects.

The proposed extension would extend the contract term through December 31, 2026, in an amount not to exceed $90,000. Funding for this contract extension is included in the 2026 Resurfacing Program budget within the Capital Projects Fund, and is included in Account No. 401-7101-550300 (ST9008).

RECOMMENDATION

It is recommended that the Village Board approve a resolution of a one-year contract extension with Construction & Geotechnical Material Testing, Inc. of Elk Grove Village, Illinois, for material testing services through December 31, 2026, in an amount not to exceed $90,000, and authorize staff to execute the necessary documents.

ATTACHMENTS:

1. 20260217_Material_Testing_Extension

VILLAGE OF ARLINGTON HEIGHTS

RESOLUTION NO. _____

A RESOLUTION APPROVING THE RENEWAL OF
MATERIAL TESTING SERVICES CONTRACT
WITH CONSTRUCTION & GEOTECHNICAL MATERIAL TESTING, IN (CGMT)

WHEREAS, on February 6, 2023, the Village entered into a contract with Construction & Geotechnical Material Testing, Inc, of Elk Grove Village (*"Consultant"*), for Material Testing Services (*"Contract"*); and

WHEREAS, the Contract allows the Village and the Consultant to renew the Contract for up to three additional one-year terms; and

WHEREAS, the Village and the Consultant now desire to renew the Contract for the first of three additional one-year term, for calendar year 2026; and

WHEREAS, the Village President and Board of Trustees have determined that renewing the Contract with the Consultant will serve and be in the best interest of the Village and its residents;

NOW, THEREFORE, BE IT RESOLVED BY THE PRESIDENT AND BOARD OF TRUSTEES OF THE VILLAGE OF ARLINGTON HEIGHTS, COOK COUNTY, ILLINOIS, as follows:

SECTION 1. RECITALS. The facts and statements contained in the preamble to this Resolution are found to be true and correct and are hereby adopted as part of this Resolution.

SECTION 2. APPROVAL OF RENEWAL. The Board of Trustees hereby approves the renewal of the Contract in substantially the form attached to this Resolution as Exhibit A (*"Renewal"*), and in a final form and substance acceptable to the Village Manager and Village Attorney.

SECTION 3. EXECUTION OF RENEWAL. The Village Manager and the Village Clerk are hereby authorized and directed to execute and attest, on behalf of the Village, the Renewal of the Contract upon receipt by the Village Clerk of at least one original copy of the Renewal of the Contract executed by Contractor; provided, however, that if the executed copy of the Renewal of the Contract is not received by the Village Clerk within 30 days after the effective date of this Resolution, then this authority to execute and attest will, at the option of the President and Board of Trustees, be null and void.

SECTION 4. EFFECTIVE DATE. This Resolution will be in full force and effect from and after its passage and approval as provided by law.

[SIGNATURE PAGE FOLLOWS]

AYES:

NAYS:

PASSED AND APPROVED THIS ___ day of _____, 20__.

_____
Village President

ATTEST:

_____
Village Clerk

EXHIBIT A

RENEWAL

Construction & Geotechnical Material Testing, Inc.

60 Martin Lane, Elk Grove Village, Illinois
Phone: (630)595-1111 ♦ Fax: (630) 595-1110

January 16, 2026

Village of Arlington Heights Engineering Department
Ms. Nanci C. Julius, P.E. | Asst. Village Engineer
33 South Arlington Heights Road
Arlington Heights, Illinois 60005

CGMT Proposal No.: 26P0109

RE: Proposal to Provide Construction Consulting & Material Testing Services
Various Village Projects – Arlington Heights, Illinois
Season: (January 1, 2026 to December 31, 2026)

Dear Nanci,

Construction & Geotechnical Material Testing, Inc. (CGMT) is pleased to offer this proposal to provide material testing services for the project referenced above. **CGMT relied on our experience with providing similar services in preparing this proposal.**

All projects are served by our facilities in Elk Grove Village with a state-of-the-art QC/QA Laboratory. The formal address of our facility is 60 Martin Lane Elk Grove Village, Illinois 60007. CGMT is a 100 % minority owned business and complies with MBE requirements. We are also a member of the DBE program. CGMT is a State of Illinois licensed Professional Design Firm, Professional Engineering Corporation, and an Illinois Department of Transportation IDOT Pre-qualified Consultant. CGMT's laboratory has been inspected by the Illinois Department of Transportation (**IDOT**), AASHTO Material Resource Laboratory (**AMRL**) and the Cement and Concrete Reference Laboratory (**CCRL**). As part of the pre-qualification program CGMT continues to earn accreditations to further advance our professional firm.

Project Description

We understand the scope of work includes field and plant quality assurance testing along with the required laboratory testing per Illinois Department of Transportation's (IDOT) specifications and Project Procedure Guide (PPG) for various village projects. CGMT is pleased to continue to perform testing per the requirements of IDOT and understand the requirements of the Village of Arlington Heights.

Key Staff Experience/Credentials

CGMT is honored to have assembled a qualified, highly educated and trained team of engineers, technicians and support staff. They hold the appropriate degrees, licenses and certifications to perform the required Scope of Services in the State of Illinois. We have a proven record of commitment and we continue to demonstrate successful team work needed to perform the quality, reliable and professional services that our clients have come to expect. **CGMT is pleased to provide services in-house including qualified engineers, a state of the art QA/QC laboratory and IDOT trained technicians available for all site testing needs.** Our team's

strength is in their experience, understanding of the requirements and scope of a project, thoroughness, communication ability and compliance. This high standard is what will assure our qualifications to perform the Construction Inspection and Testing Service this project will require. All are committed to complete the required tasks and have the experience to back it up. Our construction service manager is an Illinois registered Professional Engineer, in addition a Level III certification for both Portland Cement Concrete and Hot Mix Asphalt.

Scope of Work – Construction Monitoring

Based upon review of your plans and requests, we understand that you need the following testing services.

- Soil & Compaction Testing and Observations
- Re-bar and Plastic Concrete Testing and Observations
- Limited Environmental Consulting
- Hot Mix Asphalt Testing & Observation
- Engineering & Administrative Documentation and Overview

Construction Testing Fees

Based on the current year anticipated project quantities the requested services are budgeted for not to exceed **$90,000**. The scheduled durations for the completion of these activities were not available to CGMT during the preparation of this proposal. A fee schedule for personnel, tests, equipment, and materials that will be provided by CGMT for this project is presented in Table I. The unit prices indicated on the fee schedule will be the basis for all costs/deductions for CGMT. Should additional testing be required which had not been indicated in Table I, CGMT can quote the services upon request. *CGMT intends to service your project in the most economically efficient way practical. Where possible, concurrent activities will be covered by a single individual which could reduce the estimated costs.*

CGMT does not have control over the project schedule nor the rate at which we will be requested to perform testing. **Billing would be based on the actual time and testing requirements, as directed by your office. Our final billing would be based on the attached Schedule of Fees (Table I) for the actual work performed and our invoices will present a summary of all work authorized and performed at the direction of your office or the party responsible for scheduling.**

Our final billing would be based unit rates listed on the attached Table # I, and would be present a summary of all work authorized and performed at the direction of your office.

Costs are based on the following assumptions:

- CGMT is to complete observation and material testing upon 24 hours of notification by a representative of the client.
- The client will provide CGMT the complete set plans and specifications for the project, if printing of the plans are to be printed by CGMT, costs shall be passed through to the client.
- Client will secure the necessary permits and other legal documentation to access the sites and to perform work.
- Additional time spent on site shall be approved in advance by the client. Unit rates for this additional time will be in accordance with the Attached Table I. If there is a necessary price change CGMT, Inc. will get the approval of the client prior to invoicing.
- CGMT will attend all pre-construction meetings that are required by client.
- All field activities will be documented and presented to the client.
- All final reports prepared by CGMT will be reviewed by an engineer registered in the State of Illinois.

An itemized invoice of services performed, based on the appropriate man-hours and unit prices provided in our schedule of fees, would be provided at each billing cycle. Terms of payment for our services are net 30 days, upon your receipt of our invoice. If this account is delinquent per the terms of this contract, an interest charge of 1.5 percent will be assessed on a monthly basis.

General

CGMT appreciates the opportunity to offer this proposal for Material Testing for the projects in Arlington Heights, Illinois. Please contact me at (630) 595-1111 or email pkpatel@cgmtinc.com if you have any questions or if you need additional information.

Sincerely,
CONSTRUCTION & GEOTECHNICAL MATERIAL TESTING, INC.

Pratik K. Patel, P.E.
Vice President

Cc: File/PK
Attachments: Table I – Unit Cost to Provide Material Testing Services
CGMT Certifications
Terms & Conditions

Authorization to Proceed: 26P0109

The below signed authorization indicated acceptance of the proposal in its entirety.

Signature: _____

Name: _____ Company: _____

Title: _____ Date: _____

Please provide CGMT the Billing/Client Information below.

The party listed below shall be financially responsible for the services provided.

Name: _____ Title: _____

Company: _____

Address: _____

_____

Phone: _____ Alt. No.: _____

Fax: _____ E-mail: _____

Proposals must be signed and returned to CGMT's office prior to scheduling inspection services. This process can be expedited by sending a fax or e-mail signed copy of the authorization to proceed to the CGMT office.

Table 1 - Unit Cost To Provide Material Testing Services

Village of Arlington Heights - 2026 Material Testing Services
CGMT Proposal No.:26P0109

ITEM	CGMT to Provide	UNIT	UNIT RATES	
			Regular	Overtime*
Field Services				
Concrete and Hot Mix Asphalt QA Testing - QA 1	Labor	Hour	$85.00	$119.00
Soil and Pavement Compaction Analysis	Labor	Hour	$85.00	$119.00
Plant Inspection Concrete and Hot Mix Asphalt - QA 2	Labor	Hour	$87.50	$122.50
Field Engineer/Lab Engineer	Labor	Hour	$80.00	$112.00
Coring Operations	Labor	Hour	$150.00	$210.00
Hand Augering	Labor	Hour	$125.00	$175.00
Nuclear Density Gauge	Equipment	Day	$30.00	--
Pick-Up/Delivery of Cylinder Samples	Labor	Trip	$50.00	--
Laboratory Testing				
Concrete Compressive Strength Cylinders	Laboratory Testing	Test	$13.00	--
Core Density Determination	Laboratory Testing	Test	$20.00	--
Asphalt content by ignition oven (no gradation)	Laboratory Testing	Test	$60.00	--
Asphalt content by extraction method (no gradation)	Laboratory Testing	Test	$70.00	--
Bitumen Extraction of asphalt samples (with gradation)	Laboratory Testing	Test	$125.00	--
Bulk Specific Gravity (T166)	Laboratory Testing	Test	$80.00	--
Maximum Specific Gravity (T209)	Laboratory Testing	Test	$85.00	--
Fine Aggregate Sieve Analysis	Laboratory Testing	Test	$75.00	--
Coarse Aggregate Sieve Analysis	Laboratory Testing	Test	$75.00	--
Moisture of soil samples	Laboratory Testing	Test	$4.00	--
Atterberg limit (liquid and plastic limits)	Laboratory Testing	Test	$100.00	--
Unconfined compressive strength of selected soil samples	Laboratory Testing	Test	$15.00	--
Modified Proctor test	Laboratory Testing	Test	$145.00	--
Illinois bearing ratio (IBR test)	Laboratory Testing	Test	$450.00	--
pH Determination	Laboratory Testing	Test	$20.00	--
Combined Hydrometer & Sieve Analysis (ASTM D 422)	Laboratory Testing	Test	$150.00	--
Organic Content-LOI (ASTM 2974)	Laboratory Testing	Test	$70.00	--
Travel				
Daily Travel	Travel	Mile	$0.70	--
Case of Mold (20 ct)	Equipment	Case	$35.00	
Equipment Rental:	Equipment	Month	$175.00	
Slump Set, Rod, Bar, Air Meter, Bottle Scoop, Bucket, Thermometer				
Public Parking	Parking	Day	At Cost	--
Supervision and Oversight				
Word Processing	Labor	Hour	$35.00	--
Project Engineer/QA Manager	Labor	Hour	$85.00	--
Sr. Project Engineer (P.E.)	Labor	Hour	$95.00	--
Principal Engineer	Labor	Hour	$135.00	--

Notes:

1 When construction schedule becomes available, we would be pleased to meet with you to define our specific inspection activities, based on the project specifications.
2 Actual time to be expended would be at the direction of the client. Hours over 8 will be assessed the overtime rate indicated (*)
3 Saturdays will assess overtime charges of 1.4x regular rate and 1.8x regular rate for Sunday.
4 Minimum hourly charges: 4 hours
5 All personnel time charges are assessed on a ***portal to portal*** basis.
6 Standby time due to delays beyond CGMTs control will be charged by the hourly rates
7 Services cancelled without advanced (2 hour) notice will assess minimum charge
8 All reports are subject to review by an Engineer.

GENERAL TERMS AND CONDITIONS

1. Relationship between Engineer and Client: Construction & Geotechnical Material Testing, Inc. (CGMT) (Engineer) shall serve as Client's geotechnical and materials engineering consultant in those phases of the Project to which this Agreement applies. This relationship is that of a buyer and seller of professional services and it is understood that the parties have not entered into any joint venture or partnership with the other. The Engineer shall not be considered to be the agent of the Client.
2. Responsibility of the Engineer: Engineer will render engineering services in a manner consistent with that level of skill and care ordinarily exercised by competent members of the same profession providing similar services in the same region. Engineer makes not warranty, either expressed or implied, with respect to its services.

Notwithstanding anything to the contrary which may be contained in this Agreement or any other material incorporated herein by reference, or in any Agreement between the Client and any other party concerning the Project, the Engineer shall not have control or be in charge of and shall not be responsible for the means, methods, safety, safety precautions or programs of the Client, the construction contractor, other contractors or subcontractors performing any of the work or providing any of the services on the Project. Nor shall the Engineer be responsible for the acts or omissions of the Client, or for the failure of the Client, any architect, engineer, consultant, contractor or subcontractor to carry out their respective responsibilities in accordance with the Project documents, this Agreement or any other agreement concerning the Project. Any provision that purports to amend this provision shall be without effect unless it contains a reference that the content of this condition is expressly amended for the purposes described in such amendment and is signed by the Engineer.
3. Changes: Client reserves the right by written change order or amendment to make changes in requirements, amount of work, or engineering time schedule adjustments, and Engineer and Client shall negotiate appropriate adjustments acceptable to both parties to accommodate any changes, if commercially possible.
4. Suspension of Services: Client may, at any time, by written order to Engineer (Suspension of Services Order) require Engineer to stop all, or any part, of the services required by this Agreement. Upon receipt of such an order Engineer shall immediately comply with its terms and take all reasonable steps to reduce the occurrence of costs allocable to the services covered by the order. Client, however, shall pay all costs associated with suspension including all costs necessary to maintain continuity and the staff required to resume the services upon expiration of the suspension of work order. Engineer will not be obligated to provide the same personnel employed prior to suspension when the services are resumed, in the event the period of any suspension exceeds thirty (30) days. Client will reimburse Engineer for the cost of such suspension and remobilization.
5. Termination: This Agreement may be terminated by either party upon thirty (30) days written notice in the event of substantial failure by the other party to perform in accordance with the terms hereof through no fault of the terminating party. The Client, under the same terms, whenever Client shall determine that termination is in its best interests, may terminate this Agreement. Cost of termination and costs of worked performed at the time of termination, including salaries, overhead and fee, incurred by Engineer either before or after the termination date shall be reimbursed by Client.
6. Documents Property of Client: Drawings, specifications, reports, and any other documents prepared by Engineer in connection with any or all of the services furnished hereunder shall be the property of Client. Engineer shall have the right to retain copies of all documents and drawings for its files.
7. Reuse of Documents:

All documents including drawings and specifications furnished by Engineer pursuant to this Agreement are intended for use of only the Client on this Project only. They cannot be used by Client or others on extensions of the Project or any other project. Any reuse, without specific written verification or adaptation by Engineer, shall be at Client's sole risk, and client shall indemnify and hold harmless Engineer from all claims, damages, losses, and expenses including attorney's fees arising out of or resulting there from.
8. Compliance with Laws: The Engineer shall exercise usual and customary professional care in his efforts to comply with those laws, codes, ordinance and regulations, which are in effect as of the date of this Agreement.
9. Indemnification: Engineer shall indemnify and hold harmless Client up to the amount of its net fee for the services from loss or expense, including reasonable attorney's fees for claims for personal injury (including death) or property damage arising out of the sole negligent act, error or omission of Engineer, or to the amount of the Engineer's insurance, whichever is less.

Client shall indemnify and hold harmless Engineer, up to the same amount that Engineer undertakes to indemnify the Client under this Agreement, from loss of expense, including reasonable attorney's fees, for claims for personal injuries (including death) or property damage arising out of the sole negligent act, error or omission of Client.

In the event of joint or concurrent negligence of Engineer and Client, each shall bear that portion of the loss or expense that its share of the joint or concurrent negligence bears to the total negligence (including that of third parties), which caused the personal injury or property damage.

Engineer shall not be liable for special, incidental or consequential damages, including, but not limited to loss of profits, revenue, use of capital, claims of customers, cost of purchased or replacement power, or for any other loss of any nature, whether based on contract, tort, negligence, strict liability or otherwise by reasons of the services rendered under this Agreement.
12. Governing Law: This Agreement shall be governed by and construed in accordance with the laws of the State of Illinois.
13. Successors and Assigns: The terms of this Agreement shall be binding upon and insure to the benefit of the parties and their respective successors and assigns; provided, however, that neither party shall assign this Agreement in whole or in part without the prior written approval of the other.
14. Waiver of contract Breach: The waiver of one party of any breach of this Agreement or the failure of one party to enforce at any time or for any period of time, any of the provisions hereof, shall be limited to the particular instance, shall not operate or be deemed to waive any future breaches of this Agreement and shall not be construed to be a waiver of any provision, except for the particular instance.
15. Entire Understanding of Agreement: This Agreement represents and incorporates the entire understanding of the parties hereto, and each party acknowledges that there are no warranties, representations, covenants or understandings of any kind, matter or description whatsoever, made by either party to the other except as expressly set forth herein. Client and the Engineer hereby agree that any purchase orders, invoices, confirmations, acknowledgments or other similar documents executed or delivered with respect to the subject matter hereof that conflict with the terms of the Agreement shall be null, void and without effect to the extent they conflict with the terms of this Agreement.
16. Amendment: This Agreement shall not be subject to amendment unless another instrument is duly executed by duly authorized representatives of each of the parties and entitled "Amendment of Agreement".
17. Severability of Invalid Provision: If any provision of the Agreement shall be held to contravene or to be invalid under the laws of any particular state, county or jurisdiction where used, such contravention shall not invalidate the entire Agreement, but it shall be construed as if not containing the particular provisions held to be invalid in the particular state, country or jurisdiction and the rights or obligations of the parties hereto shall be construed and enforced accordingly.
18. Access and Permits: Client shall arrange for Engineer to enter upon public and private property and obtain all necessary approvals and permits required from all governmental authorities having jurisdiction over the Project. Client shall pay costs (including Engineer's employee salaries, overhead and fee) incident to any effort by Engineer toward assisting Client in such access, permits or approvals, if Engineer performs such services.
19. Designation of Authorized Representative: Each party shall designate one or more persons to act with authority in its behalf in respect to all aspects of the Project. The persons designated shall review and respond promptly to all communications received from the other party.
20. Notices: Any notice or designation required to be given to either party hereto shall be in writing, and unless receipt of such notice is expressly required by the terms hereof shall be deemed to be effectively served when deposited in the mail with sufficient first class postage affixed, addressed to the party to whom such notice is directed at such party's place of business or such other address as either party shall hereafter furnish to the other party by written notice as herein provided.
21 Payment for Services Invoices for the work are to be submitted on the 15th and last day of the month for work done during each respective time frame. An itemized invoice of services performed, based on the appropriate man-hours and unit prices provided in our schedule of fees, would be provided at each billing cycle. Terms of payment for our services are net due at the time of receipt of the final report and our invoice. If this account is delinquent per the terms of this contract, an interest charge of 1.5 percent will be assessed on a monthly basis.
22. Limitation of Liability: Client agrees to allocate certain of the risks associated with the project by limiting Engineer's total liability to Client, subject to available insurance proceeds, arising from Engineer's professional acts, errors, or omissions and for any and all causes under this agreement to the fullest extent permitted by law as follows. For projects where Engineer's fee estimate or proposed fees are:

a. less than $10,000 or less, Engineer's total aggregate liability shall not exceed $5,000, or the total fee for the services rendered, whichever is greater.
b. greater than $10,000, Engineer's total aggregate liability shall not exceed $25,000 or the total fee for the services rendered, whichever is greater.

Authorization to Proceed: 23P0119

The below signed authorization indicated acceptance of the proposal in its entirety.

Signature: Randall R Recklaus

Name: Randall Recklaus Company: Vill of Arlington Hts

Title: Villase Manager Date: 2/17/23

Please provide CGMT the Billing/Client Information below.

The party listed below shall be financially responsible for the services provided.

Name: _____ Title: _____

Company: _____

Address: _____

_____

Phone: _____ Alt. No.: _____

Fax: _____ E-mail: _____

Proposals must be signed and returned to CGMT's office prior to scheduling inspection services. This process can be expedited by sending a fax or e-mail signed copy of the authorization to proceed to the CGMT office.

Construction & Geotechnical Material Testing, Inc.

60 Martin Lane, Elk Grove Village, Illinois
Phone: (630)595-1111 ♦ Fax: (630) 595-1110

February 15, 2023
CGMT Proposal No.: 23P0119

Village of Arlington Heights Engineering Department
Mr. Michael L. Pagones, P.E. | Village Engineer
33 South Arlington Heights Road
Arlington Heights, Illinois 60005

RE: Proposal to Provide Construction Consulting & Material Testing Services
Various Village Projects – Arlington Heights, Illinois
Three year contract
Current: (January 1, 2023 to December 31, 2023)
Year 2: (January 1, 2024 to December 31, 2024)
Year 3: (January 1, 2025 to December 31, 2025)

Dear Mr. Pagones,

Construction & Geotechnical Material Testing, Inc. (CGMT) is pleased to offer this proposal to provide material testing services for the project referenced above. **CGMT relied on our experience with providing similar services in preparing this proposal.**

All projects are served by our facilities in Elk Grove Village with a state-of-the-art QC/QA Laboratory. The formal address of our facility is 60 Martin Lane Elk Grove Village, Illinois 60007. CGMT is a 100 % minority owned business and complies with MBE requirements. We are also a member of the DBE program. CGMT is a State of Illinois licensed Professional Design Firm, Professional Engineering Corporation, and an Illinois Department of Transportation IDOT Pre-qualified Consultant. CGMT's laboratory has been inspected by the Illinois Department of Transportation (**IDOT**), AASHTO Material Resource Laboratory (**AMRL**) and the Cement and Concrete Reference Laboratory (**CCRL**). As part of the pre-qualification program CGMT continues to earn accreditations to further advance our professional firm.

Project Description

We understand the scope of work includes field and plant quality assurance testing along with the required laboratory testing per Illinois Department of Transportation's (IDOT) specifications and Project Procedure Guide (PPG) for various village projects. CGMT is pleased to continue to perform testing per the requirements of IDOT and understand the requirements of the Village of Arlington Heights.

Key Staff Experience/Credentials

CGMT is honored to have assembled a qualified, highly educated and trained team of engineers, technicians and support staff. They hold the appropriate degrees, licenses and certifications to perform the required Scope of Services in the State of Illinois. We have a proven record of commitment and we continue to demonstrate successful team work needed to perform the quality, reliable and professional services that our clients have

come to expect. **CGMT is pleased to provide services in-house including qualified engineers, a state of the art QA/QC laboratory and IDOT trained technicians available for all site testing needs.** Our team's strength is in their experience, understanding of the requirements and scope of a project, thoroughness, communication ability and compliance. This high standard is what will assure our qualifications to perform the Construction Inspection and Testing Service this project will require. All are committed to complete the required tasks and have the experience to back it up. Our construction service manager is an Illinois registered Professional Engineer, in addition a Level III certification for both Portland Cement Concrete and Hot Mix Asphalt.

Scope of Work – Construction Monitoring

Based upon review of your plans and requests, we understand that you need the following testing services.

- Soil & Compaction Testing and Observations
- Re-bar and Plastic Concrete Testing and Observations
- Limited Environmental Consulting
- Hot Mix Asphalt Testing & Observation
- Engineering & Administrative Documentation and Overview

Construction Testing Fees

Based on the current year anticipated project quantities the requested services are budgeted for **$94,245**. Additional years' service will be based on anticipated project quantities to be determined on a yearly basis after completion of design. Based on The scheduled durations for the completion of these activities were not available to CGMT during the preparation of this proposal. A fee schedule for personnel, tests, equipment, and materials that will be provided by CGMT for this project is presented in Table I. The unit prices indicated on the fee schedule will be the basis for all costs/deductions for CGMT. Should additional testing be required which had not been indicated in Table I, CGMT can quote the services upon request. *CGMT intends to service your project in the most economically efficient way practical. Where possible, concurrent activities will be covered by a single individual which could reduce the estimated costs.*

CGMT does not have control over the project schedule nor the rate at which we will be requested to perform testing. **Billing would be based on the actual time and testing requirements, as directed by your office. Our final billing would be based on the attached Schedule of Fees (Table I) for the actual work performed and our invoices will present a summary of all work authorized and performed at the direction of your office or the party responsible for scheduling.**

Our final billing would be based unit rates listed on the attached Table # I, and would be present a summary of all work authorized and performed at the direction of your office.

Costs are based on the following assumptions:

- CGMT is to complete observation and material testing upon 24 hours of notification by a representative of the client.
- The client will provide CGMT the complete set plans and specifications for the project, if printing of the plans are to be printed by CGMT, costs shall be passed through to the client.
- Client will secure the necessary permits and other legal documentation to access the sites and to perform work.
- Additional time spent on site shall be approved in advance by the client. Unit rates for this additional time will be in accordance with the Attached Table I. If there is a necessary price change CGMT, Inc. will get the approval of the client prior to invoicing.
- CGMT will attend all pre-construction meetings that are required by client.
- All field activities will be documented and presented to the client.
- All final reports prepared by CGMT will be reviewed by an engineer registered in the State of Illinois.

An itemized invoice of services performed, based on the appropriate man-hours and unit prices provided in our schedule of fees, would be provided at each billing cycle. Terms of payment for our services are net 30 days, upon your receipt of our invoice. If this account is delinquent per the terms of this contract, an interest charge of 1.5 percent will be assessed on a monthly basis.

General

CGMT appreciates the opportunity to offer this proposal for Material Testing for the projects in Arlington Heights, Illinois. Please contact me at (630) 595-1111 or email pkpatel@cgmtinc.com if you have any questions or if you need additional information.

Sincerely,
CONSTRUCTION & GEOTECHNICAL MATERIAL TESTING, INC.

Pratik K. Patel, P.E.
Vice President

Cc: File/PK
Attachments: Table I – Unit Cost to Provide Material Testing Services
Table II – Estimated Cost for Provide Material Testing Services
CGMT Certifications
Terms & Conditions

Table 1 - Unit Cost To Provide Material Testing Services

Village of Arlington Heights - 2023 Material Testing Services
CGMT Proposal No.: 23P0119

ITEM	CGMT to Provide	UNIT	UNIT RATES	
			Regular	Overtime*
Field Services				
Concrete and Hot Mix Asphalt QA Testing - QA 1	Labor	Hour	$85.00	$119.00
Soil and Pavement Compaction Analysis	Labor	Hour	$85.00	$119.00
Plant Inspection Concrete and Hot Mix Asphalt - QA 2	Labor	Hour	$87.50	$122.50
Field Engineer/Lab Engineer	Labor	Hour	$80.00	$112.00
Coring Operations	Labor	Hour	$150.00	$210.00
Hand Augering	Labor	Hour	$125.00	$175.00
Nuclear Density Gauge	Equipment	Day	$30.00	--
Pick-Up/Delivery of Cylinder Samples	Labor	Trip	$50.00	--
Laboratory Testing				
Concrete Compressive Strength Cylinders	Laboratory Testing	Test	$13.00	--
Core Density Determination	Laboratory Testing	Test	$20.00	--
Asphalt content by ignition oven (no gradation)	Laboratory Testing	Test	$60.00	--
Asphalt content by extraction method (no gradation)	Laboratory Testing	Test	$70.00	--
Bitumen Extraction of asphalt samples (with gradation)	Laboratory Testing	Test	$125.00	--
Bulk Specific Gravity (T166)	Laboratory Testing	Test	$80.00	--
Maximum Specific Gravity (T209)	Laboratory Testing	Test	$85.00	--
Fine Aggregate Sieve Analysis	Laboratory Testing	Test	$75.00	--
Coarse Aggregate Sieve Analysis	Laboratory Testing	Test	$75.00	--
Moisture of soil samples	Laboratory Testing	Test	$4.00	--
Atterberg limit (liquid and plastic limits)	Laboratory Testing	Test	$100.00	--
Unconfined compressive strength of selected soil samples	Laboratory Testing	Test	$15.00	--
Modified Proctor test	Laboratory Testing	Test	$145.00	--
Illinois bearing ratio (IBR test)	Laboratory Testing	Test	$450.00	--
pH Determination	Laboratory Testing	Test	$20.00	--
Combined Hydrometer & Sieve Analysis (ASTM D 422)	Laboratory Testing	Test	$150.00	--
Organic Content-LOI (ASTM 2974)	Laboratory Testing	Test	$70.00	--
Travel				
Daily Travel	Travel	Mile	$0.55	--
Case of Mold (20 ct)	Equipment	Case	$35.00	
Equipment Rental:	Equipment	Month	$175.00	
Slump Set, Rod, Bar, Air Meter, Bottle Scoop, Bucket, Thermometer				
Public Parking	Parking	Day	At Cost	--
Supervision and Oversight				
Word Processing	Labor	Hour	$35.00	--
Project Engineer/QA Manager	Labor	Hour	$85.00	--
Sr. Project Engineer (P.E.)	Labor	Hour	$95.00	--
Principal Engineer	Labor	Hour	$135.00	--

Notes:

1 When construction schedule becomes available, we would be pleased to meet with you to define our specific inspection activities, based on the project specifications.
2 Actual time to be expended would be at the direction of the client. Hours over 8 will be assessed the overtime rate indicated (*)
3 Saturdays will assess overtime charges of 1.4x regular rate and 1.8x regular rate for Sunday.
4 Minimum hourly charges: 4 hours
5 All personnel time charges are assessed on a ***portal to portal*** basis.
6 Standby time due to delays beyond CGMTs control will be charged by the hourly rates
7 Services cancelled without advanced (2 hour) notice will assess minimum charge
8 All reports are subject to review by an Engineer.

Table II - Estimated Cost To Provide Material Testing Services

Village of Arlington Heights - 2023 Material Testing Services
CGMT Proposal No.: 23P0119

ITEM	CGMT to Provide	UNIT	UNIT RATES		
			Regular	Est. Units	Estimate
2023 Estimated Services					
Field and Plant Concrete	Labor	Hour	$85.00	375	$31,875.00
Hot Mix Asphalt Testing Services	Labor	Hour	$85.00	190	$16,150.00
Nuclear Density Gauge	Equipment	Day	$30.00	40	$1,200.00
Concrete Compressive Strength Testing (incl. mold)	Laboratory Testing	Test	$13.00	530	$6,890.00
Pick up Samples	Labor	Trip	$50.00	50	$2,500.00
Bitumen Extraction of asphalt samples (with gradation)	Laboratory Testing	Test	$125.00	25	$3,125.00
Bulk Specific Gravity (T166)	Laboratory Testing	Test	$80.00	25	$2,000.00
Maximum Specific Gravity (T209)	Laboratory Testing	Test	$85.00	25	$2,125.00
Fine Aggregate Gradation (Washed)	Laboratory Testing	Test	$75.00	25	$1,875.00
Coarse Aggregate Gradation (Washed)	Laboratory Testing	Test	$75.00	25	$1,875.00
Core Bulk Density Determination	Laboratory Testing	Test	$20.00	20	$400.00
Coring Operations	Labor	Hour	$150.00	40	$6,000.00
pH Determination	Laboratory Testing	Test	$20.00	65	$1,300.00
Auger Sampling Environmental	Labor	Hour	$125.00	25	$3,125.00
Engineering Services	Labor	Hour	$85.00	110	$9,350.00
Mileage	Travel	Mile	$0.55	4600	$2,530.00
Word Processing	Labor	Hour	$35.00	55	$1,925.00
				2023 Estimated Services	**$94,245.00**

CGMT Certification and Licenses

PROFESSIONAL DESIGN FIRM

State of Illinois

Department of Financial and Professional Regulation

Division of Professional Regulation

184.004370-0002
062 061170

04/30/2023

DESIGN FIRM - PROFESSIONAL ENGINEERING

CONST & GEOTECHNICAL MATERIAL TESTING INC
60 MARTIN LN
ELK GROVE VILLAGE, IL 60007-1308

AASHTO

American Association of State Highway and Transportation Officials

AASHTO Accreditation Program Certificate of Accreditation

This is to certify that

Construction & Geotechnical Material Testing, Inc.

in

Elk Grove, Illinois

has demonstrated proficiency for the testing of construction materials and has conformed to the minimum requirements established in AASHTO R 18 as set forth by the AASHTO Highway Subcommittee on Materials (HSCOM).

The scope of accreditation can be viewed on the AAP Directory of Accredited Laboratories at www.aashtoware.com.

Bud Wright, Program Director

Mike Hanscom, AASHTO HSCOM Chair

AASHTO THE VOICE OF TRANSPORTATION

AAP AASHTOWARE

IDOT Prequalification Listing

CGMT, INC.

Is DBE? ☐

Pratik Patel
60 Martin Lane
Elk Grove Village, IL 60007

Phone: (630) 595-1111 Ext:
Fax: (630) 595-1110

Categories: Geotechnical Services - General Geotechnical Services, Geotechnical Services - Subsurface Explorations, Special Services - Quality Assurance HMA & Aggregate, Special Services - Quality Assurance PCC & Aggregate

IDOT Materials Letter

Illinois Department of Transportation
Office of Highways Project Implementation / Region 1 / District 1
201 West Center Court / Schaumburg, Illinois 60196-1096

March 17, 2022

Mr. Pratik Patel
Construction Geotechnical & Material Testing, Inc
60 Martin Lane
Elk Grove Village, IL 60007

Dear Mr. Patel:

The inspection of your Elk Grove Village Facility, Lab #1361, was completed on March 10, 2022 by representatives of the Illinois Department of Transportation. The Laboratory is approved for Aggregate, PCC & HMA Testing.

All tests shall be performed in accordance with the Department's current version of the Manual of Test Procedures for Materials. Any personnel performing these tests shall be appropriately trained and certified via State approved courses.

If you have any questions or need additional information, please contact Mr. Paul Welch, Independent Assurance Technician at (847) 221-3156 or at (847) 741-5301.

Very truly yours,

Jose Rios, P.E.
Region One Engineer

By: C.m.
Stephen Jones, P.E.
Bureau Chief of Materials

IDOT Geotechnical Letter

Illinois Department of Transportation
Office of Highways Project Implementation / Region 1 / District 1
201 West Center Court / Schaumburg, Illinois 60196-1096

Consultant: Construction & Geotechnical Material Testing, Inc.
60 Martin Lane
Elk Grove Village, IL 60007

The above consultant has the required equipments to perform the following tests: (only checked items apply)

Item	Requirements
TOPSOIL ✓	Page 2: A & I, Page 3: Organic Matter & pH of Soils
LABORATORY ✓	Page 2: B-H, Page 2 & 3: up to Specific Gravity
LAB and FIELD ✓	Page 4 & 5

All equipments, as indicated above, have been inspected and are physically present at the captioned consultant facility. Any exceptions are noted and no approval for that portion is now given. This equipment inspection in no way attests to the ability or qualification of the captioned consultant facility to perform the required tests. Re-inspection is required on an annual basis. This verification expires one year from the signed date below.

This inspection does not relieve the consultant from AASHTO Accreditation inspection which is requirement for prequalification in the Geotechnical Services category. IDOT will not require full accreditation in all soil tests, but there are four crucial tests that impact foundation design, embankment stability analysis, and construction recommendations. The four tests are unconfined compressive strength test (AASHTO T 208), consolidation test (AASHTO T 216), UU triaxial compression test (AASHTO T 296), and CU triaxial compression test (AASHTO T 297).

IDOT Prequal Letter

Illinois Department of Transportation
2300 South Dirksen Parkway / Springfield, Illinois / 62764

September 11, 2022

Subject: PRELIMINARY ENGINEERING
Consultant Unit
Prequalification File

Pratik Patel
CGMT, Inc
60 Martin Lane
Elk Grove Village, IL 60007

Dear Pratik Patel,

We have completed our review of your "Statement of Experience and Financial Condition" (SEFC) which you submitted for the fiscal year ending Dec 31, 2020. Your firm's total annual transportation fee capacity will be $1,600,000.

Your firm's payroll burden and fringe expense rate and general and administrative expense rate totaling 109.89% are approved on a provisional basis. The rate used in agreement negotiations may be verified by our Bureau of Investigations and Compliance in a pre-award audit. Pursuant to 23 CFR 172.11(d), we are providing notification that we will post your company's indirect cost rate to the Federal Highway Administration's Audit Exchange where it may be viewed by auditors from other State Highway Agencies.

Your firm is required to submit an amended SEFC through the Engineering Prequalification & Agreement System (EPAS) to the office to show any additions or deletions of your licensed professional staff or any other key personnel that would affect your firm's prequalification in a particular category. Changes must be submitted within 15 calendar days of the change and be submitted through the Engineering Prequalification and Agreement System (EPAS).

Your firm is prequalified until December 31, 2021. You will be given an additional six months from this date to submit the applicable portions of the "Statement of Experience and Financial Condition" (SEFC) to remain prequalified.

Sincerely,
Jack Elston, P.E.
Bureau Chief
Bureau of Design and Environment

MBE

JAN 09 2018

Kanti Patel
Construction & Geotechnical Material Testing, Inc. (dba CGMT, Inc.)
60 Martin Lane
Elk Grove Village, IL 60007

Dear Kanti Patel:

We are pleased to inform you that Construction & Geotechnical Material Testing, Inc. (dba CGMT, Inc.) has been certified as a Minority-Owned Business Enterprise ("MBE") by the City of Chicago ("City"). This MBE certification is valid until 1/9/2019. However, your firm's certification must be reaffirmed annually. In the past the City has provided you with an annual letter confirming your certification. Such letters will no longer be issued. This is communicated, we believe you to be even more diligent in filing your annual No-Change Affidavit 60 days before your annual anniversary date.

DBE

NOV - 8 2017

Kanti Patel
Construction & Geotechnical Material Testing, Inc.
dba CGMT, Inc.
60 Martin Lane
Elk Grove Village, IL 60007-1308

Dear Kanti Patel:

The City of Chicago has reviewed your annual *No Change Affidavit* and supporting documentation and is pleased to inform you that your firm, **Construction & Geotechnical Material Testing, Inc. (dba CGMT, Inc.)**, continues to meet the Disadvantaged Business Enterprise ("DBE") certification program eligibility standards set forth in 49 CFR Part 26. Your next No Change Affidavit is due October 15, 2018.

GENERAL TERMS AND CONDITIONS

1. Relationship between Engineer and Client: Construction & Geotechnical Material Testing, Inc. (CGMT) (Engineer) shall serve as Client's geotechnical and materials engineering consultant in those phases of the Project to which this Agreement applies. This relationship is that of a buyer and seller of professional services and it is understood that the parties have not entered into any joint venture or partnership with the other. The Engineer shall not be considered to be the agent of the Client.
2. Responsibility of the Engineer: Engineer will render engineering services in a manner consistent with that level of skill and care ordinarily exercised by competent members of the same profession providing similar services in the same region. Engineer makes not warranty, either expressed or implied, with respect to its services.

Notwithstanding anything to the contrary which may be contained in this Agreement or any other material incorporated herein by reference, or in any Agreement between the Client and any other party concerning the Project, the Engineer shall not have control or be in charge of and shall not be responsible for the means, methods, safety, safety precautions or programs of the Client, the construction contractor, other contractors or subcontractors performing any of the work or providing any of the services on the Project. Nor shall the Engineer be responsible for the acts or omissions of the Client, or for the failure of the Client, any architect, engineer, consultant, contractor or subcontractor to carry out their respective responsibilities in accordance with the Project documents, this Agreement or any other agreement concerning the Project. Any provision that purports to amend this provision shall be without effect unless it contains a reference that the content of this condition is expressly amended for the purposes described in such amendment and is signed by the Engineer.
3. Changes: Client reserves the right by written change order or amendment to make changes in requirements, amount of work, or engineering time schedule adjustments, and Engineer and Client shall negotiate appropriate adjustments acceptable to both parties to accommodate any changes, if commercially possible.
4. Suspension of Services: Client may, at any time, by written order to Engineer (Suspension of Services Order) require Engineer to stop all, or any part, of the services required by this Agreement. Upon receipt of such an order Engineer shall immediately comply with its terms and take all reasonable steps to reduce the occurrence of costs allocable to the services covered by the order. Client, however, shall pay all costs associated with suspension including all costs necessary to maintain continuity and the staff required to resume the services upon expiration of the suspension of work order. Engineer will not be obligated to provide the same personnel employed prior to suspension when the services are resumed, in the event the period of any suspension exceeds thirty (30) days. Client will reimburse Engineer for the cost of such suspension and remobilization.
5. Termination: This Agreement may be terminated by either party upon thirty (30) days written notice in the event of substantial failure by the other party to perform in accordance with the terms hereof through no fault of the terminating party. The Client, under the same terms, whenever Client shall determine that termination is in its best interests, may terminate this Agreement. Cost of termination and costs of worked performed at the time of termination, including salaries, overhead and fee, incurred by Engineer either before or after the termination date shall be reimbursed by Client.
6. Documents Property of Client: Drawings, specifications, reports, and any other documents prepared by Engineer in connection with any or all of the services furnished hereunder shall be the property of Client. Engineer shall have the right to retain copies of all documents and drawings for its files.
7. Reuse of Documents:

All documents including drawings and specifications furnished by Engineer pursuant to this Agreement are intended for use of only the Client on this Project only. They cannot be used by Client or others on extensions of the Project or any other project. Any reuse, without specific written verification or adaptation by Engineer, shall be at Client's sole risk, and client shall indemnify and hold harmless Engineer from all claims, damages, losses, and expenses including attorney's fees arising out of or resulting there from.
8. Compliance with Laws: The Engineer shall exercise usual and customary professional care in his efforts to comply with those laws, codes, ordinance and regulations, which are in effect as of the date of this Agreement.
9. Indemnification: Engineer shall indemnify and hold harmless Client up to the amount of its net fee for the services from loss or expense, including reasonable attorney's fees for claims for personal injury (including death) or property damage arising out of the sole negligent act, error or omission of Engineer, or to the amount of the Engineer's insurance, whichever is less.

Client shall indemnify and hold harmless Engineer, up to the same amount that Engineer undertakes to indemnify the Client under this Agreement, from loss of expense, including reasonable attorney's fees, for claims for personal injuries (including death) or property damage arising out of the sole negligent act, error or omission of Client.

In the event of joint or concurrent negligence of Engineer and Client, each shall bear that portion of the loss or expense that its share of the joint or concurrent negligence bears to the total negligence (including that of third parties), which caused the personal injury or property damage.

Engineer shall not be liable for special, incidental or consequential damages, including, but not limited to loss of profits, revenue, use of capital, claims of customers, cost of purchased or replacement power, or for any other loss of any nature, whether based on contract, tort, negligence, strict liability or otherwise by reasons of the services rendered under this Agreement.
12. Governing Law: This Agreement shall be governed by and construed in accordance with the laws of the State of Illinois.
13. Successors and Assigns: The terms of this Agreement shall be binding upon and insure to the benefit of the parties and their respective successors and assigns; provided, however, that neither party shall assign this Agreement in whole or in part without the prior written approval of the other.
14. Waiver of contract Breach: The waiver of one party of any breach of this Agreement or the failure of one party to enforce at any time or for any period of time, any of the provisions hereof, shall be limited to the particular instance, shall not operate or be deemed to waive any future breaches of this Agreement and shall not be construed to be a waiver of any provision, except for the particular instance.
15. Entire Understanding of Agreement: This Agreement represents and incorporates the entire understanding of the parties hereto, and each party acknowledges that there are no warranties, representations, covenants or understandings of any kind, matter or description whatsoever, made by either party to the other except as expressly set forth herein. Client and the Engineer hereby agree that any purchase orders, invoices, confirmations, acknowledgments or other similar documents executed or delivered with respect to the subject matter hereof that conflict with the terms of the Agreement shall be null, void and without effect to the extent they conflict with the terms of this Agreement.
16. Amendment: This Agreement shall not be subject to amendment unless another instrument is duly executed by duly authorized representatives of each of the parties and entitled "Amendment of Agreement".
17. Severability of Invalid Provision: If any provision of the Agreement shall be held to contravene or to be invalid under the laws of any particular state, county or jurisdiction where used, such contravention shall not invalidate the entire Agreement, but it shall be construed as if not containing the particular provisions held to be invalid in the particular state, country or jurisdiction and the rights or obligations of the parties hereto shall be construed and enforced accordingly.
18. Access and Permits: Client shall arrange for Engineer to enter upon public and private property and obtain all necessary approvals and permits required from all governmental authorities having jurisdiction over the Project. Client shall pay costs (including Engineer's employee salaries, overhead and fee) incident to any effort by Engineer toward assisting Client in such access, permits or approvals, if Engineer performs such services.
19. Designation of Authorized Representative: Each party shall designate one or more persons to act with authority in its behalf in respect to all aspects of the Project. The persons designated shall review and respond promptly to all communications received from the other party.
20. Notices: Any notice or designation required to be given to either party hereto shall be in writing, and unless receipt of such notice is expressly required by the terms hereof shall be deemed to be effectively served when deposited in the mail with sufficient first class postage affixed, addressed to the party to whom such notice is directed at such party's place of business or such other address as either party shall hereafter furnish to the other party by written notice as herein provided.
21 Payment for Services Invoices for the work are to be submitted on the 15th and last day of the month for work done during each respective time frame. An itemized invoice of services performed, based on the appropriate man-hours and unit prices provided in our schedule of fees, would be provided at each billing cycle. Terms of payment for our services are net due at the time of receipt of the final report and our invoice. If this account is delinquent per the terms of this contract, an interest charge of 1.5 percent will be assessed on a monthly basis.
22. Limitation of Liability: Client agrees to allocate certain of the risks associated with the project by limiting Engineer's total liability to Client, subject to available insurance proceeds, arising from Engineer's professional acts, errors, or omissions and for any and all causes under this agreement to the fullest extent permitted by law as follows. For projects where Engineer's fee estimate or proposed fees are:

a. less than $10,000 or less, Engineer's total aggregate liability shall not exceed $5,000, or the total fee for the services rendered, whichever is greater.
b. greater than $10,000, Engineer's total aggregate liability shall not exceed $25,000 or the total fee for the services rendered, whichever is greater.

VILLAGE OF ARLINGTON HEIGHTS
INC. 1887

Village Board of Trustees
2/17/2026

Item: No Parking Ordinance along South Cedar Glen Drive 135 feet south of East Algonquin Road

Department: Public Works & Engineering

Item Description:

BACKGROUND

The Public Works and Engineering Department recently received a traffic request for parking restrictions along South Cedar Glen Drive. The request proposes prohibiting parking along the east side of South Cedar Glen Drive. Upon investigation, staff concurs with this request and recommends extending the no-parking restrictions to both the east and west sides of South Cedar Glen Drive.

As part of the analysis, Staff found that the turning movements of trucks entering and exiting the property at 955 East Algonquin Road, combined with the higher speeds of vehicles turning onto South Cedar Glen Drive, create potential safety concerns for vehicles parked near East Algonquin Road.

Implementing no-parking restrictions along both sides of South Cedar Glen Drive will provide a wider effective turning radius for trucks accessing 955 East Algonquin Road and improve sight lines and driver awareness for vehicles entering South Cedar Glen Drive as they transition into the multi-family residential area.

RECOMMENDATION

It is recommended that the Village Board approve the attached Ordinance designating "No Parking" restrictions on both sides of South Cedar Glen Drive, beginning at the south side of East Algonquin Road and extending south approximately 135 feet.

ATTACHMENTS:

1. 20260217_CedarGlenDr_No_Parking_Attach

AN ORDINANCE PROHIBITING PARKING

BE IT ORDAINED BY THE PRESIDENT AND BOARD OF TRUSTEES OF THE VILLAGE OF ARLINGTON HEIGHTS:

SECTION ONE: It shall be unlawful for any person, firm or corporation to park, stop or stand a motor vehicle on the following designated street within the corporate limits of Arlington Heights:

> **BOTH SIDES of SOUTH CEDAR GLEN DRIVE, beginning at the SOUTH SIDE of EAST ALGONQUIN ROAD and ending 135 FEET IN THE SOUTHERLY DIRECTION.**

Said portion of the street is depicted on the attached map as Exhibit A, attached hereto and made a part hereof.

SECTION TWO: That the Village Manager is hereby directed to install appropriate signs to effectuate the purposes of this Ordinance.

SECTION THREE: That any person, firm or corporation violating any of the terms of this Ordinance shall be fined not more than $750.00 for each such offense.

SECTION FOUR: That any and all ordinances in conflict with the provisions of this Ordinance are hereby repealed.

SECTION FIVE: This Ordinance shall be in full force and effect from and after its passage, approval, publication in pamphlet form, and the posting of such signs in the manner provided by law.

AYES:

NAYS:

PASSED AND APPROVED this 17th February 2026

_____
Village President

ATTEST:

_____
Village Clerk

Algonquin Rd &
Cedar Glen Dr
E Algonquin Rd
960
2523
E Algonquin Rd
No Parking Signs
2607
2611
955
Cedar Glen Drive

VILLAGE OF ARLINGTON HEIGHTS
INC. 1887

Village Board of Trustees
2/17/2026

Item: 7 W. Dundee Rd. - Popeye's - Sign Variation - DC#25-091
Department: Planning & Community Development

Item Description:
A public meeting was held by the Design Commission on January 27, 2026 where the Design Commission unanimously recommended to the Village Board of Trustees, approval of the following sign variations for Popeye's located at 7 W. Dundee Road.

1. A variation from Chapter 30, Section 30-208.b, to allow a 22.61 sf fully digital drive-through menu board, where fully electronic menu board signage is not allowed.
2. A variation from Chapter 30, Section 30-208.c, to allow a 7.64 sf fully digital drive-through pre-sell menu board, where fully electronic pre-sell menu board signage is not allowed.

This recommendation is subject to compliance with the site plan, electronic menu board drawings and manufacturer specifications received 11/11/25, Federal, State and Village Codes, regulations, and policies, and the issuance of all required permits, and the following conditions:

1. Use of the electronic displays shall comply with all operational standards for electronic signs as set forth in Chapter 30, Section 30-705.h, which includes static displays only (no scrolling, fading, flashing, animation, video, or sound), auto-dimming photocell technology to control brightness to .3 footcandles maximum above ambient lighting conditions, no off-premises advertising, and only permitted to be illuminated during the hours that the business is open.
2. This review deals with architectural design only and should not be construed to be an approval of, or to have any other impact on, any other zoning and/or land use issues or decisions that stem from zoning, building, signage or any other reviews. In addition to the normal technical review, permit drawings will be reviewed for consistency with the Design Commission and any other Commission or Board approval conditions. It is the architect/homeowner/builder's responsibility to comply with the Design Commission approval and

ensure that building permit plans comply with all zoning code, building permit and signage requirements.

ATTACHMENTS:

1. Staff Report_Popeye's_7 W. Dundee Rd.
2. DC Minutes 1-27-26 - Popeye's
3. Exhibits_Popeye's_7 W Dundee Rd
4. Photos_Popeye's_7 W Dundee Rd
5. Suggested VB Motion 2.17.26-Popeyes Sign Variation

STAFF DESIGN COMMISSION REPORT

PROJECT INFORMATION:

Project Name: Popeye's - Sign Variation
Project Address: 7 W. Dundee Road
Prepared By: Steve Hautzinger

Date Prepared: January 21, 2026

PETITION INFORMATION:

DC Number: 25-091
Petitioner Name: David Mikel
Petitioner Address: Site Enhancement Services
6001 Nimitz Parkway
South Bend, IN 46628

Meeting Date: January 27, 2026

Requested Action(s):

1. A variation from Chapter 30, Section 30-208.b, to allow a 22.61 sf fully digital drive-through menu board, where fully electronic menu board signage is not allowed.
2. A variation from Chapter 30, Section 30-208.c, to allow a 7.64 sf fully digital drive-through pre-sell menu board, where fully electronic pre-sell menu board signage is not allowed.

ANALYSIS:

Summary:
The subject design is being forwarded to the Design Commission for review pursuant to Chapter 6 of the Municipal Code, specifically Section 6-501 (e)(1), which states that the Design Commission "shall review all Plan Commission, Zoning Board of Appeals, Building Permit and Sign Permit applications for new construction and those improvements which affect the architectural design of the building, site improvements or signage to determine whether it meets with the standards, requirements and purposes of the Design Guidelines and Chapter 30, Sign Regulations."

The existing Popeye's restaurant located at 7 W. Dundee Road is proposing to replace their existing conventional printed drive-through menu boards with new fully electronic menu boards along their existing drive-through lane. There are two existing identical menu boards which are each 52.66 sf. The proposed new electronic menu boards will be installed in the same location as existing. The proposed electronic pre-sell menu board will be 7.64 sf, and the main electronic menu board will be 22.61 sf. One existing speaker bollard will remain.

Table 1: Drive-Through Menu Boards Summary

SIGN	QUANTITY	SIZE	HEIGHT (7' MAX. PER CODE)	REMARKS
Existing Conventional Printed Menu Board	2	52.66 sf	7' (approx.)	To be removed.
Proposed Fully Electronic Pre-Sell Menu Board	1	7.64 sf	5'-2"	Variation required for fully digital display.
Proposed Fully Electronic Menu Board	1	22.61 sf	5'-2"	Variation required for fully digital display.

Sign Variation Criteria:
The Village Sign Code, Chapter 30, Section 30-901 sets out the criteria for granting a sign variation.

a. *That the particular difficulty or peculiar hardship is not self-created by the Petitioner.*
b. *That the granting of said variation will not create a traffic hazard, a depreciation of nearby property values or otherwise be detrimental to the public health, safety, morals and welfare;*
c. *That the variation will serve to relieve the Petitioner from a difficulty attributable to the location, topography, circumstances on nearby properties or other peculiar hardship, and will not merely serve to provide the Petitioner with a competitive advantage over similar businesses;*
d. *That the variation will not alter the essential character of the locality;*
e. *That the Petitioner's business cannot reasonably function under the standards of this chapter.*

The petitioner has submitted a letter addressing the sign variation criteria, which in summary outlines the need for fully electronic menu boards for efficiency, safety, order accuracy, and to improve communication with their customers. They feel that the electronic menu boards will be easier to read, and they are becoming the new industry standard.

Staff Comments:
Overall, Staff does not object to the use of fully electronic menu boards since they allow for easier menu updates and they are generally smaller than conventional menu boards. Similar fully electronic menu board sign variations have been previously approved in Arlington Heights for McDonald's, Burger King, and Dunkin.

The electronic menu boards are required to comply with the operational standards set forth in Chapter 30, Section 30-705(h), which states that the electronic signs will display static images only (without scrolling, fading, flashing, animation, video, or sound), auto-dimming photocell technology to control brightness to .3 footcandles maximum above ambient lighting conditions, no off-premises advertising, and only permitted to be illuminated during the hours that the business is open.

The petitioner has provided manufacturer documentation confirming auto-dimming functionality to control the brightness, and they have stated that there will be no animation or motion on the displays.

RECOMMENDATION
It is recommended that the Design Commission recommend **approval** to the Village Board for the following sign variations for *Popeye's* at 7 W. Dundee Road:

1. A variation from Chapter 30, Section 30-208.b, to allow a 22.61 sf fully digital drive-through menu board, where fully electronic menu board signage is not allowed.
2. A variation from Chapter 30, Section 30-208.c, to allow a 7.64 sf fully digital drive-through pre-sell menu board, where fully electronic pre-sell menu board signage is not allowed.

This recommendation is subject to compliance with the site plan, electronic menu board drawings and manufacturer specifications received on 11/11/25, Federal, State, and Village Codes, regulations, and policies, and the issuance of all required permits, and the following conditions:

1. Use of the electronic displays shall comply with all operational standards for electronic signs as set forth in Chapter 30, Section 30-705.h, which includes static displays only (no scrolling, fading, flashing, animation, video, or sound), auto-dimming photocell technology to control brightness to .3 footcandles maximum above ambient lighting conditions, no off-premises advertising, and only permitted to be illuminated during the hours that the business is open.

2. This review deals with architectural design only and should not be construed to be an approval of, or to have any other impact on, any other zoning and/or land use issues or decisions that stem from zoning, building, signage or any other reviews. In addition to the normal technical review, permit drawings will be reviewed for consistency with the Design Commission and any other Commission or Board approval conditions. It is the architect/homeowner/builder's responsibility to comply with the Design Commission approval and ensure that building permit plans comply with all zoning code, building permit and signage requirements.

_____ January 21, 2026

Steve Hautzinger AIA, Design Planner
Department of Planning & Community Development

c: Emily Rodman, Director of Planning and Community Development, Petitioner, DC File 25-091

DRAFT

MINUTES OF
THE VILLAGE OF ARLINGTON HEIGHTS
DESIGN COMMISSION

ARLINGTON HEIGHTS MUNICIPAL BUILDING
33 S. ARLINGTON HEIGHTS RD.
JANUARY 27, 2026

Chair Kingsley called the meeting to order at 6:30 p.m.

Members Present: Kirsten Kingsley, Chair
John Fitzgerald
Jonathan Kubow
Ted Eckhardt

Members Absent: Scott Seyer

Also Present: Kevin Purdom, JRC Design Build for *1161 N. Hickory Ave.*
John Haran, E&J Builders for *1321 N. Mitchell Ave.*
Charley Schalliol, Site Enhancement Services for *Popeye's*
Steve Hautzinger, Planning Staff

REVIEW OF MEETING MINUTES FOR DECEMBER 16, 2025

A MOTION WAS MADE BY COMMISSIONER FITZGERALD, SECONDED BY COMMISSIONER ECKHARDT, TO APPROVE THE MEETING MINUTES OF DECEMBER 16, 2025. ALL WERE IN FAVOR. MOTION CARRIED.

ITEM 3. SIGN VARIATION REVIEW

DC#25-091 – Popeye's – 7 W. Dundee Rd.

Charley Schalliol, representing *Site Enhancement Services,* was present on behalf of the project.

Mr. Hautzinger summarized Staff comments. The existing Popeye's restaurant located at 7 W. Dundee Road is proposing to replace their existing conventional printed drive-through menu boards with new fully electronic menu boards along their existing drive-through lane. There are two existing identical menu boards which are each 52.66 sf. The proposed new electronic menu boards will be installed in the same location as existing. The proposed electronic pre-sell menu board will be 7.64 sf, and the main electronic menu board will be 22.61 sf. One existing speaker bollard will remain.

The sign variation requests are as follows:

1. A variation from Chapter 30, Section 30-208.b, to allow a 22.61 sf fully digital drive-through menu board, where fully electronic menu board signage is not allowed.
2. A variation from Chapter 30, Section 30-208.c, to allow a 7.64 sf fully digital drive-through pre-sell menu board, where fully electronic pre-sell menu board signage is not allowed.

The petitioner has submitted a letter addressing the sign variation criteria, which in summary outlines the need for fully electronic menu boards for efficiency, safety, order accuracy, and to improve communication with their customers. They feel that the electronic menu boards will be easier to read, and they are becoming the new industry standard.

Overall, Staff does not object to the use of fully electronic menu boards since they allow for easier menu updates and they are generally smaller than conventional menu boards. Similar fully electronic menu board sign variations have been previously approved in Arlington Heights for McDonald's, Burger King, and Dunkin.

The electronic menu boards are required to comply with the operational standards set forth in Chapter 30, Section 30-705(h), which states that the electronic signs will display static images only (without scrolling, fading, flashing, animation, video, or sound), auto-dimming photocell technology to control brightness to .3 footcandles maximum above ambient lighting conditions, no off-premises advertising, and only permitted to be illuminated during the hours that the business is open. The petitioner has provided manufacturer documentation confirming auto-dimming functionality to control the brightness, and they have stated that there will be no animation or motion on the displays.

Staff recommends approval to the Village Board for the sign variation requests for *Popeye's* at 7 W. Dundee Road, with a condition that the use of the electronic displays shall comply with all operational standards for electronic signs as set forth in Chapter 30, Section 30-705.h, which includes static displays only (no scrolling, fading, flashing, animation, video, or sound), auto-dimming photocell technology to control brightness to .3 footcandles maximum above ambient lighting conditions, no off-premises advertising, and only permitted to be illuminated during the hours that the business is open.

The petitioner had no comments at this time.

The commissioners were all in support of the sign variation requests and had no comments.

A MOTION WAS MADE BY COMMISSIONER ECKHARDT, SECONDED BY COMMISSIONER KUBOW, TO RECOMMEND TO THE VILLAGE BOARD OF TRUSTEES, APPROVAL OF THE FOLLOWING SIGN VARIATIONS FOR *POPEYE'S* LOCATED AT 7 W. DUNDEE ROAD:

1. **A VARIATION FROM CHAPTER 30, SECTION 30-208.B, TO ALLOW A 22.61 SF FULLY DIGITAL DRIVE-THROUGH MENU BOARD, WHERE FULLY ELECTRONIC MENU BOARD SIGNAGE IS NOT ALLOWED.**
2. **A VARIATION FROM CHAPTER 30, SECTION 30-208.C, TO ALLOW A 7.64 SF FULLY DIGITAL DRIVE-THROUGH PRE-SELL MENU BOARD, WHERE FULLY ELECTRONIC PRE-SELL MENU BOARD SIGNAGE IS NOT ALLOWED.**

THIS RECOMMENDATION IS SUBJECT TO COMPLIANCE WITH THE SITE PLAN, ELECTRONIC MENU BOARD DRAWINGS AND MANUFACTURER SPECIFICATIONS RECEIVED ON 11/11/25, FEDERAL, STATE AND VILLAGE CODES, REGULATIONS, AND POLICIES, THE ISSUANCE OF ALL REQUIRED PERMITS, AND THE FOLLOWING CONDITIONS:

1. **USE OF THE ELECTRONIC DISPLAYS SHALL COMPLY WITH ALL OPERATIONAL STANDARDS FOR ELECTRONIC SIGNS AS SET FORTH IN CHAPTER 30, SECTION 30-705.H, WHICH INCLUDES STATIC DISPLAYS ONLY (NO SCROLLING, FADING, FLASHING, ANIMATION, VIDEO, OR SOUND), AUTO-DIMMING PHOTOCELL TECHNOLOGY TO CONTROL BRIGHTNESS TO .3 FOOTCANDLES MAXIMUM ABOVE AMBIENT LIGHTING CONDITIONS, NO OFF-PREMISES ADVERTISING, AND ONLY PERMITTED TO BE ILLUMINATED DURING THE HOURS THAT THE BUSINESS IS OPEN.**
2. **THIS REVIEW DEALS WITH ARCHITECTURAL DESIGN ONLY AND SHOULD NOT BE CONSTRUED TO BE AN APPROVAL OF, OR TO HAVE ANY OTHER IMPACT ON, NOR REPRESENT ANY TACIT APPROVAL OR SUPPORT FOR THE PROPOSED LAND USE OR ANY OTHER ZONING AND/OR LAND USE ISSUES OR DECISIONS THAT STEM FROM ZONING, BUILDING, SIGNAGE OR ANY OTHER REVIEWS. IN ADDITION TO THE NORMAL TECHNICAL REVIEW, PERMIT DRAWINGS WILL BE REVIEWED FOR CONSISTENCY WITH THE DESIGN COMMISSION AND ANY OTHER COMMISSION OR BOARD APPROVAL CONDITIONS. IT IS THE PETITIONER'S RESPONSIBILTY TO INCORPORATE ALL REQUIREMENTS LISTED ON THE CERTIFICATE OF APROPRIATENESS INTO THE PERMIT DRAWINGS, AND TO ENSURE THAT BUILDING PERMIT PLANS AND SIGN PERMIT PLANS COMPLY WITH ALL ZONING CODE, BUILDING CODE AND SIGN CODE REQUIREMENTS.**

KUBOW, AYE; FITZGERALD, AYE; ECKHARDT, AYE; KINGSLEY, AYE.
ALL WERE IN FAVOR. MOTION CARRIED.

Mr. Hautzinger said he will contact the petitioner with the Village Board date for final review and approval of the sign variations.

DRAFT

a. The particular difficulty or peculiar hardship is not self-created by the petitioner

The need for a digital menu board arises from advancements in technology and industry standards across the quick-service restaurant sector, not from any self-created condition. The existing manual board was compliant when originally installed; however, the drive-thru operation now requires digital display capabilities for efficiency, safety, and accuracy. The property's current configuration, including the drive-thru lane layout and equipment placement, limits the ability to improve communication with customers without upgrading to digital equipment. The hardship stems from technological and operational evolution rather than any action by the applicant.

b. The granting of the variation shall not create a traffic hazard, a depreciation of nearby property values, or otherwise be detrimental to the public health, safety, morals, and welfare

The replacement of the manual menu board with a digital one will not increase traffic or impact surrounding properties. The digital board will occupy the same general location, height, and area as the existing board, ensuring no additional visual obstruction. The display will feature automatic brightness controls that adjust based on ambient light levels, preventing glare or distraction to motorists. The modernized equipment will improve order accuracy, reduce wait times, and enhance customer flow through the drive-thru, which in turn contributes positively to public safety and site functionality.

c. The variation will serve to relieve the applicant from a difficulty attributable to the location, topography, circumstances on nearby properties, or other peculiar hardship; and not merely serve to provide the applicant with a competitive advantage over similar businesses

The site's drive-thru configuration presents certain spatial limitations that make operational efficiency dependent on clear and legible communication. The existing manual board can be difficult to read under varying lighting conditions, especially at night or in inclement weather. The proposed digital board relieves this operational hardship by providing illuminated, high-contrast text that adjusts automatically for visibility and accessibility. The request is not intended to provide an unfair competitive advantage but to maintain functionality consistent with other nearby restaurants that already utilize similar digital technology.

d. The variation will not alter the essential character of the locality

The proposed digital menu board is consistent with the commercial character of the surrounding area, which contains several modernized retail and restaurant operations along commercial corridors. The digital board's design, size, and placement will remain in

harmony with existing site aesthetics and surrounding development. It will not introduce excessive brightness, animation, or motion that could alter the visual environment. The result will be an updated, well-maintained appearance that complements the overall visual quality of the district.

e. The applicant's business cannot reasonably function under the standards of this Chapter

In today's quick-service restaurant operations, digital drive-thru displays have become essential for accuracy, efficiency, and safety. Manual menu boards no longer support real-time menu changes, promotional updates, or order confirmation systems that are standard across the industry. Without the ability to upgrade to digital equipment, this Popeyes location would face ongoing operational inefficiencies and reduced service quality compared to other similarly situated restaurants. The requested variation is therefore necessary for the restaurant to function in a modern and compliant manner under current operational expectations.

1100
Buffalo Grove High School
1200
Dundee Rd
68
115
105
15
7
9
15
1031-1041
1211-1205
Arlington Heights Rd
3441
3431
Ventura Condos
3424-3426
3430-3438
Private
110
120
W Boeger Dr
E Boeger Dr
125
121

GENERAL NOTES

1. CONSTRUCTION SHALL COMPLY WITH ALL APPLICABLE LOCAL, STATE, AND NATIONAL CODES AND REGULATIONS.
2. CONTRACTOR SHALL FIELD VERIFY ALL DIMENSIONS AND EXISTING CONDITIONS PRIOR TO BID TO DETERMINE THE EXTENT OF WORK. THE CONTRACTOR SHALL NOTIFY THE ARCHITECT OF ANY DISCREPANCIES PRIOR TO BIDDING.
3. ALL EXISTING MATERIALS TO REMAIN WHICH ARE DAMAGED OR OTHERWISE DISTURBED BY THE CONTRACTOR'S OPERATIONS SHALL BE PATCHED OR REPAIRED TO MATCH THE EXISTING ADJACENT MATERIALS, SO THAT THE REPAIR IS IMPERCEPTIBLE.
4. DURING THE COURSE OF CONSTRUCTION, IF THE CONTRACTOR UNCOVERS ANY CODE VIOLATION KNOWN TO HIM OR ANY DISCREPANCY WITH THE DESIGN, CONTRACTOR SHALL NOTIFY THE ARCHITECT OF SUCH IMMEDIATELY.
5. CONTRACTOR SHALL ASSEMBLE AND INSTALL MATERIALS/ PRODUCTS IN STRICT ACCORDANCE WITH THE MANUF'S RECOMMENDATIONS AND INDUSTRIAL/ASSOCIATION STANDARDS.
6. CONTACT ARCHITECT AND COORDINATE WITH TENANT ANY ADDITIONAL SPECIFICATIONS NOT SPECIFIED HEREIN AND/OR CLARIFICATIONS REGARDING THE CONTRACT DOCUMENTS.
7. NO CURRENT SURVEY WAS PERFORMED. THE CONTRACTOR SHALL NOTIFY THE ENGINEER IMMEDIATELY, IN WRITING, OF ANY DISCREPANCIES OR OMISSIONS TO THE TOPOGRAPHIC INFORMATION. THE CONTRACTOR(S) SHALL BE RESPONSIBLE FOR CONFIRMING THE LOCATION (HORIZONTAL/VERTICAL) OF ANY BURIED CABLES, CONDUITS, PIPES, AND STRUCTURES (STORM SEWER, SANITARY SEWER, WATER, GAS, TELEVISION, TELEPHONE, ETC.) WHICH IMPACT THE CONSTRUCTION SITE. THE CONTRACTOR(S) SHALL NOTIFY THE OWNER AND ENGINEER IN WRITING IF ANY DISCREPANCIES ARE FOUND BETWEEN THE ACTUAL CONDITIONS VERSUS THE DATA CONTAINED IN THE CONSTRUCTION PLANS. ANY COSTS INCURRED AS THE RESULT OF NOT CONFIRMING THE ACTUAL LOCATION (HORIZONTAL/VERTICAL) OF SAID CABLES, CONDUITS, PIPES, AND STRUCTURES SHALL BE BORNE BY THE CONTRACTOR. ADDITIONALLY, THE CONTRACTOR(S) SHALL NOTIFY THE OWNER AND ENGINEER IN WRITING IF ANY ERRORS OR DISCREPANCIES ARE FOUND ON THE CONSTRUCTION DOCUMENTS (PS&E), WHICH NEGATIVELY IMPACT THE PROJECT. THE ENGINEER AND OWNER SHALL BE INDEMNIFIED OF PROBLEMS AND/OR COST WHICH MAY RESULT FROM THE CONTRACTOR'S FAILURE TO NOTIFY THE ENGINEER AND OWNER.
8. IT IS STRONGLY RECOMMENDED THAT NO CONTRACTUAL AGREEMENT OF ANY KIND BE SIGNED PRIOR TO RECEIVING AND THOROUGHLY REVIEWING ALL APPROVALS FROM ALL OF THE REGULATORY AUTHORITIES HAVING JURISDICTION OVER THIS PROJECT.

SITE NOTES

1. ALL DIMENSIONS SHOWN ARE TO FACE OF CURB UNLESS NOTED OTHERWISE.
2. BASES, ANCHOR BOLTS, CONDUIT, AND WIRING FOR ALL SIGNS ARE BY THE GENERAL CONTRACTOR.
3. EXISTING MENU BOARDS AND PRE- SALE BOARDS TO BE REMOVED FROM BASES, REMOVED FROM SITE, AND DISPOSED UNLESS DIRECTED BY BAILIWICK. CONDUITS TO BE CAPPED TO PREVENT MOISTURE ENTRANCE.

UTILITY NOTES

1. ALL ELECTRICAL/CONDUIT RUNS ARE SCHEMATIC ONLY. CONDUIT SIZES AND ROUTING PROVIDED BY BAILIWICK.
2. IT SHALL BE THE SIGN INSTALLER'S RESPONSIBILITY TO ENSURE THE PROPOSED SIGN LOCATION DOES NOT INTERFERE WITH ANY UTILITIES AND COMPLIES WITH ALL APPLICABLE CITY CODES. SIGN INSTALLER SHALL ALSO OBTAIN APPROVAL FROM THE APPROPRIATE ENTITIES PRIOR TO INSTALLING THE SIGN OVER ANY EXISTING EASEMENTS.
3. REFER TO THE BUILDING ELECTRICAL DRAWINGS FOR UTILITY SERVICE ENTRANCE LOCATIONS, SIZES, AND CIRCUITING.

DEMOLITION NOTES

1. CONTRACTOR IS RESPONSIBLE FOR THE REPAIR OF ANY DAMAGE TO EXISTING IMPROVEMENTS DURING CONSTRUCTION, SUCH AS, BUT NOT LIMITED TO: DRAINAGE, UTILITIES, PAVEMENT, STRIPING, CURB, ETC. REPAIRS SHALL BE EQUAL TO OR BETTER THAN EXISTING CONDITIONS.
2. ALL WORK ON THIS PLAN SHALL BE DONE IN STRICT ACCORDANCE WITH SITE WORK SPECIFICATIONS.
3. CONTRACTOR SHALL COMPLY TO THE FULLEST EXTENT WITH THE LATEST STANDARDS OF OSHA DIRECTIVES OR ANY OTHER AGENCY HAVING JURISDICTION FOR EXCAVATION AND TRENCHING PROCEDURE. CONTRACTOR SHALL USE SUPPORT SYSTEMS, SLOPING, BENCHING, OR OTHER MEANS OF PROTECTION, INCLUDING BUT IS NOT LIMITED TO, ACCESS AND EGRESS FROM ALL EXCAVATION AND TRENCHING. CONTRACTOR IS RESPONSIBLE TO COMPLY WITH PERFORMANCE CRITERIA FOR OSHA.
4. CONTRACTOR SHALL BE RESPONSIBLE FOR PROTECTING THE PUBLIC DURING CONSTRUCTION, INCLUDING BUT NOT LIMITED TO: CONSTRUCTION FENCING, BARRICADES, SIGNAGE, ETC.
5. CONTRACTOR IS RESPONSIBLE FOR VERIFYING ALL UTILITIES AND NOTIFYING THE APPROPRIATE UTILITY COMPANY PRIOR TO BEGINNING CONSTRUCTION.
6. CONTRACTOR SHALL VERIFY HORIZONTAL AND VERTICAL LOCATION OF ALL EXISTING UTILITIES PRIOR TO CONSTRUCTION.

SCOPE OF WORK

REMOVE EXISTING MENU BOARDS AND CAP CONDUIT PER SITE NOTES. INSTALL NEW MENU BOARDS AND ALL REQUIRED CONDUIT AND WIRING. REFER TO MANUFACTURERS BOARD PUBLISHED INSTALLATION INSTRUCTIONS.

BUILDING CODE SUMMARY

APPLICABLE BUILDING CODE:	2018 INTERNATIONAL BUILDING CODE
APPLICABLE ELECTRICAL CODE:	2017 NATIONAL ELECTRICAL CODE
USE GROUP:	A2 - ASSEMBLY
BUILDING DEPARTMENT PHONE NO:	847-368-5560
EXISTING SIGNAGE AREA TO BE REMOVED:	52.66 SQ FT
NEW SIGNAGE AREA TO BE ADDED:	30.25 SQ FT
PROJECT ADDRESS:	7 W DUNDEE RD ARLINGTON HEIGHTS, IL 60004

VICINITY MAP (NTS)

PRE-BROWSE
7.64 SQ FT

THREE PANEL MENU BOARD
22.61 SQ FT

SIDE VIEW

NEW MENU BOARDS AND PRE-BROWSE BOARDS

NOT TO SCALE

1

THREE PANEL MENU BOARD
W/ TOPPER
52.66 SQ FT

EXISTING SIGNAGE BOARDS TO BE REMOVED

NOT TO SCALE

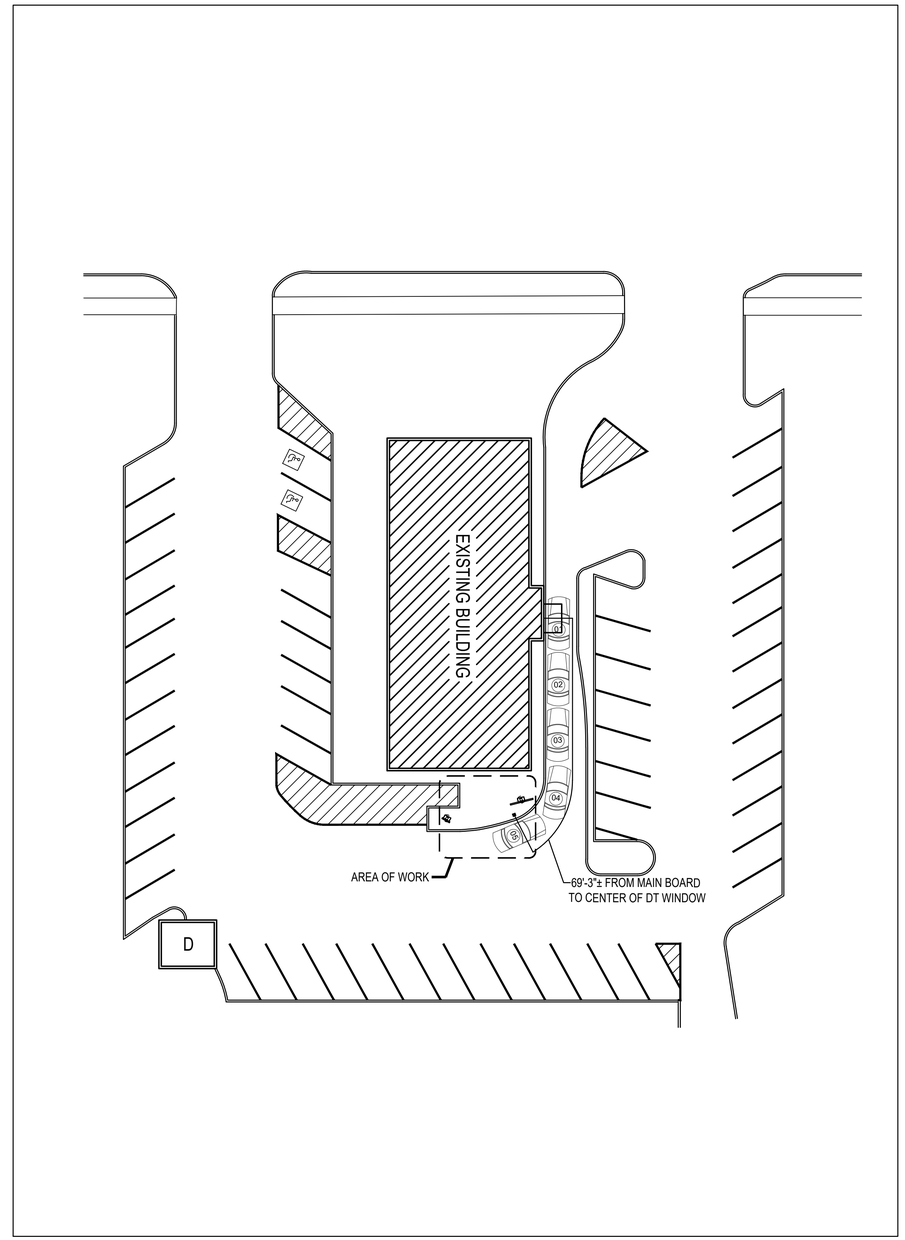

EXISTING OVERALL SITE PLAN

SCALE: 1" = 20'-0"

REV	DATE	BY	DESCRIPTION
1	10/21/2025	SFE	UPDATED DIMENSIONS ON "EXISTING SIGNAGE BOARD", C1.0

Donna A Elliott Architect
1317 Executive Blvd, Suite 200
Chesapeake, VA 23320
PH (757) 622-2828
FAX (757) 622-6883

LICENSED ARCHITECT
DONNA A. ELLIOTT
001-026477
STATE OF ILLINOIS
10/22/2025 EXP: 11/30/24

POPEYES LOUISIANA KITCHEN
PLK 2119
SITE ADDRESS: 7 W DUNDEE RD
ARLINGTON HEIGHTS, IL 60004

DATE	7/16/2021
PROJECT	21450-84
DESIGNED	BNS
DRAWN	BNS
CHECKED	DFM

SITE PLAN AND NOTES

C1.0

FILE NAME: C:\Users\sevens\appdata\local\temp\AcPublish_20984\45084A_C1_0.dwg LAYOUT NAME: Work PLOTTED: Wednesday, October 22, 2025 - 8:20am

EXISTING DRIVE-THROUGH MENU
BOARDS TO BE REMOVED

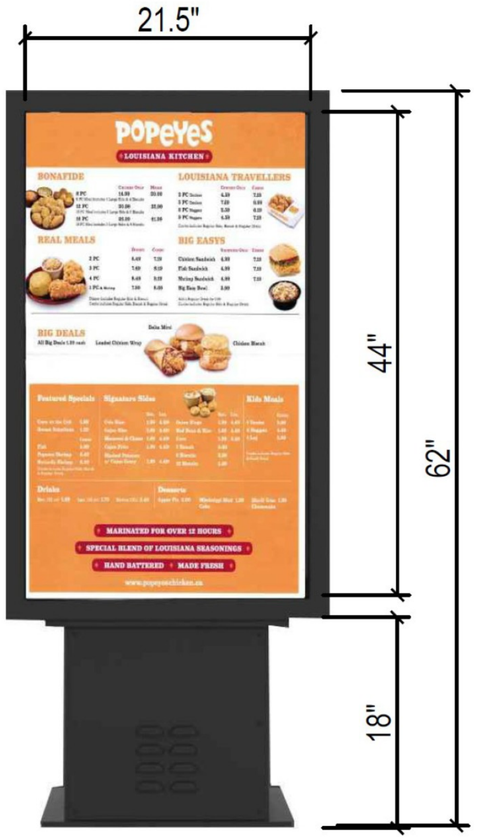

PRE-BROWSE
7.64 SQ FT

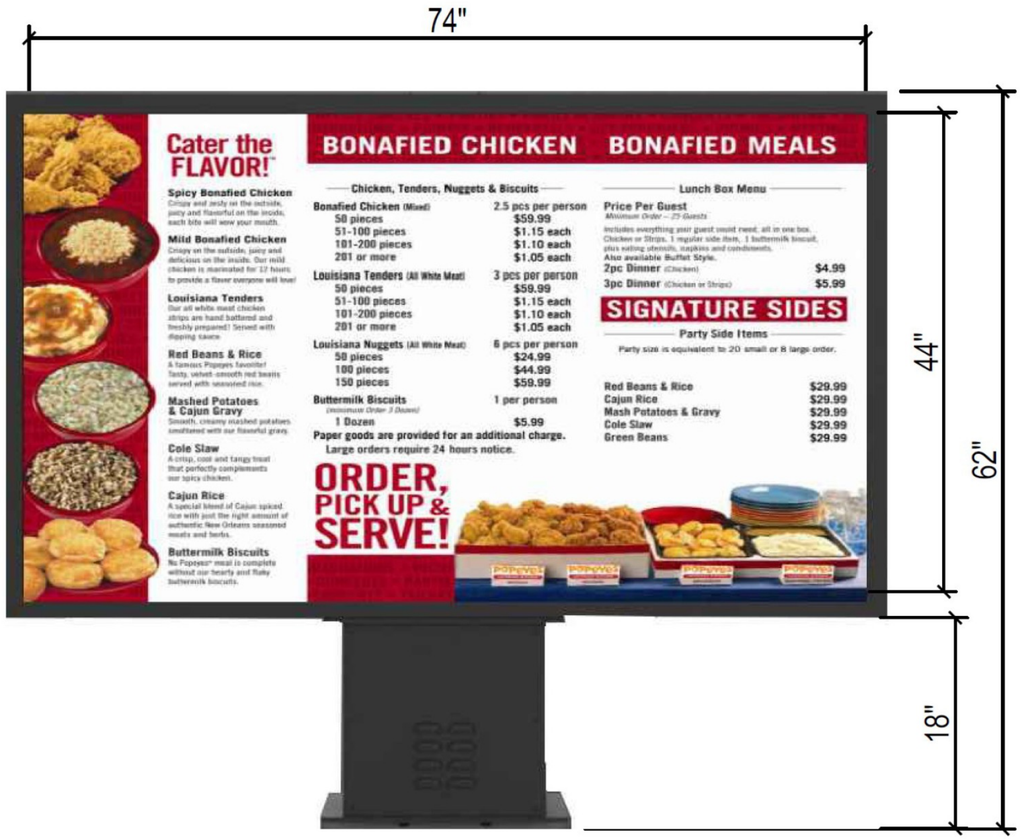

THREE PANEL MENU BOARD
22.61 SQ FT

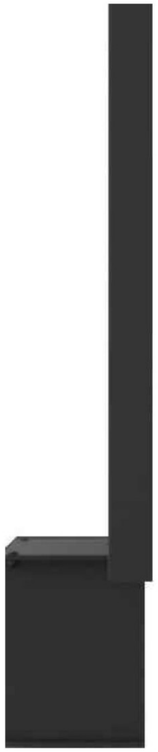

SIDE VIEW

NEW MENU BOARDS AND PRE-BROWSE BOARDS

SITE PLAN KEY NOTES

1	EXISTING SIGNAGE TO BE REMOVED. SEE SITE NOTE #3.
2	EXISTING SPEAKER TO REMAIN
3	TRIPLE PANEL MENU BOARD. REFER TO STRUCTURAL SHEET FOR FOOTING INFORMATION.
4	SINGLE PANEL MENU BOARD. REFER TO STRUCTURAL SHEET FOR FOOTING INFORMATION.

SITE PLAN LEGEND

EXISTING ORDER POINT/SPEAKER POST TO REMAIN

NEW TRIPLE PANEL OUTDOOR DIGITAL MENU BOARD

NEW SINGLE PANEL OUTDOOR DIGITAL PRE-SALE BOARD

EXISTING MENU BOARDS TO BE REMOVED — MAIN BOARD, PB BOARD

ELECTRICAL PLAN NOTES

1. INTENT OF DESIGN: DISCONNECT POWER AND DATA FEEDS FROM EXISTING MENU BARDS AND PRE-SALE BOARDS, REMOVE AND DISPOSE.
2. CONTRACTORS ARE TO INSTALL NEW CONDUIT , ELECTRICAL WIRE AND DATA CABLE.
3. NOTED CIRCUIT NUMBERS DERIVED FROM EXISTING PANEL DIRECTORY INSERTS, CONTRACTOR TO FIELD VERIFY AND UTILIZE EXISTING BRANCH CIRCUITS FEEDING THE PRIMARY (BRANCH CIRCUIT 1) AND SECONDARY (BRANCH CIRCUIT 2) MENU BOARDS AND PRE-BROWSE BOARDS.
4. COORDINATE ALL CONDUIT AND CIRCUITING SIZE REQUIREMENTS WITH MANUFACTURERS INSTALL REQUIREMENTS
5. ALL NEW PULLBOXES / HANDHOLDS SHALL BE A MINIMUM OF TIER 8 QUAZITES BOX OR APPROVED EQUAL.
6. PROVIDE DEDICATED NEUTRAL FOR ALL CIRCUITS, NO SHARED NEUTRALS ALLOWED.

CONDUIT PLAN KEY NOTES

1	ONE 3/4" PVC CONDUIT (4-#12, 1-#12 GRD, 1-#12 IG) FROM PANEL CP TO J-BOX
2	ONE 3/4" PVC CONDUIT (2-#12, 1-#12 GRD, 1-#12 IG) FROM J-BOX TO NEW MAIN MENU BOARD
3	ONE 3/4" PVC CONDUIT (2-#12, 1-#12 GRD, 1-#12 IG) FROM J-BOX TO NEW PRE-SALE BOARD
4	ONE 2" PVC CONDUIT (CAT6 DATA CABLES) FROM BUILDING TO J-BOX
5	ONE 2" PVC CONDUIT (CAT6 DATA CABLES) FROM J-BOX TO MENU BOARD
6	ONE 2" PVC CONDUIT (CAT6 DATA CABLES) FROM J-BOX TO PRE-SALE BOARD

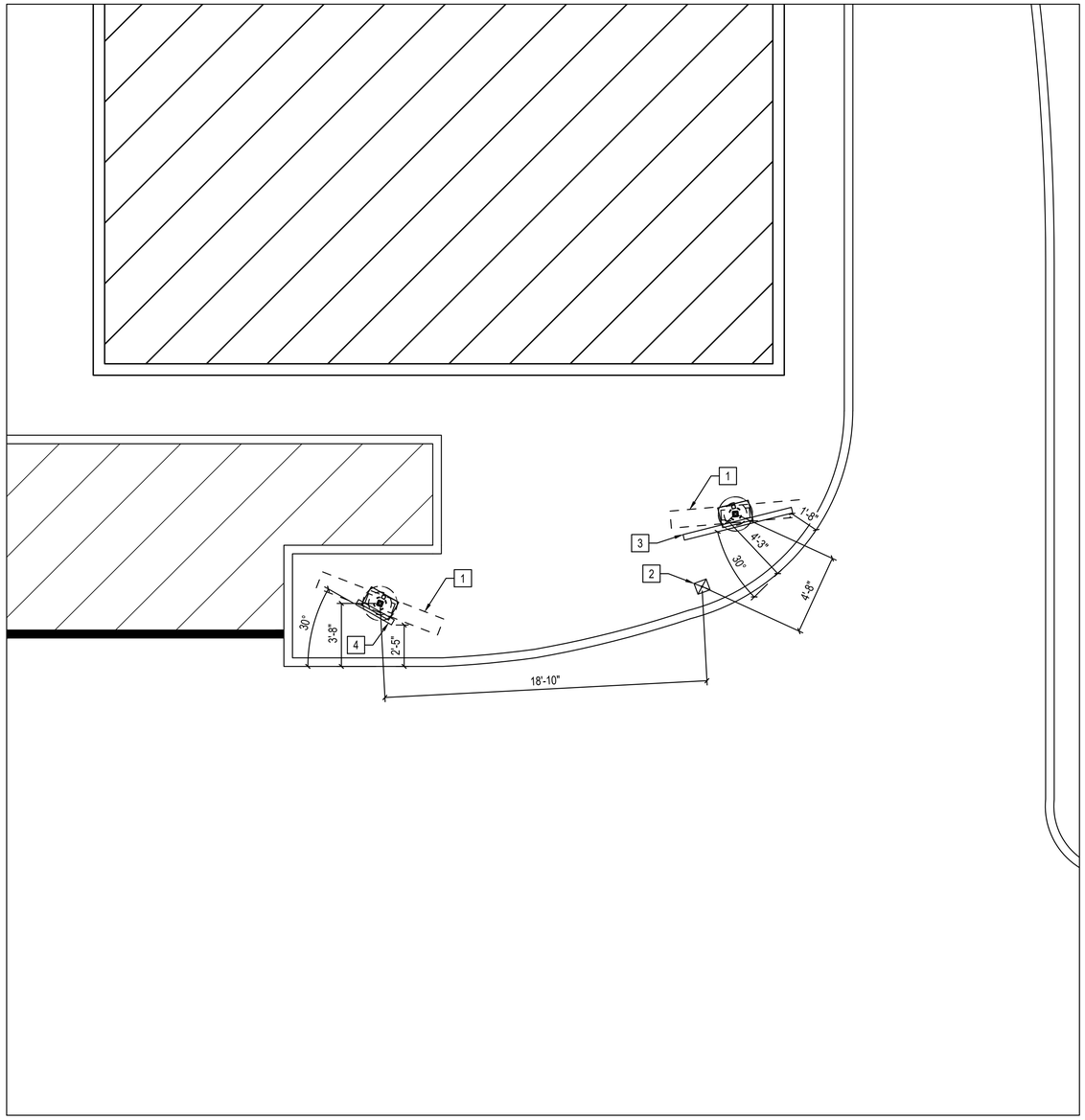

ENLARGED SITE PLAN
SCALE: 1/4" = 1'-0"
NORTH

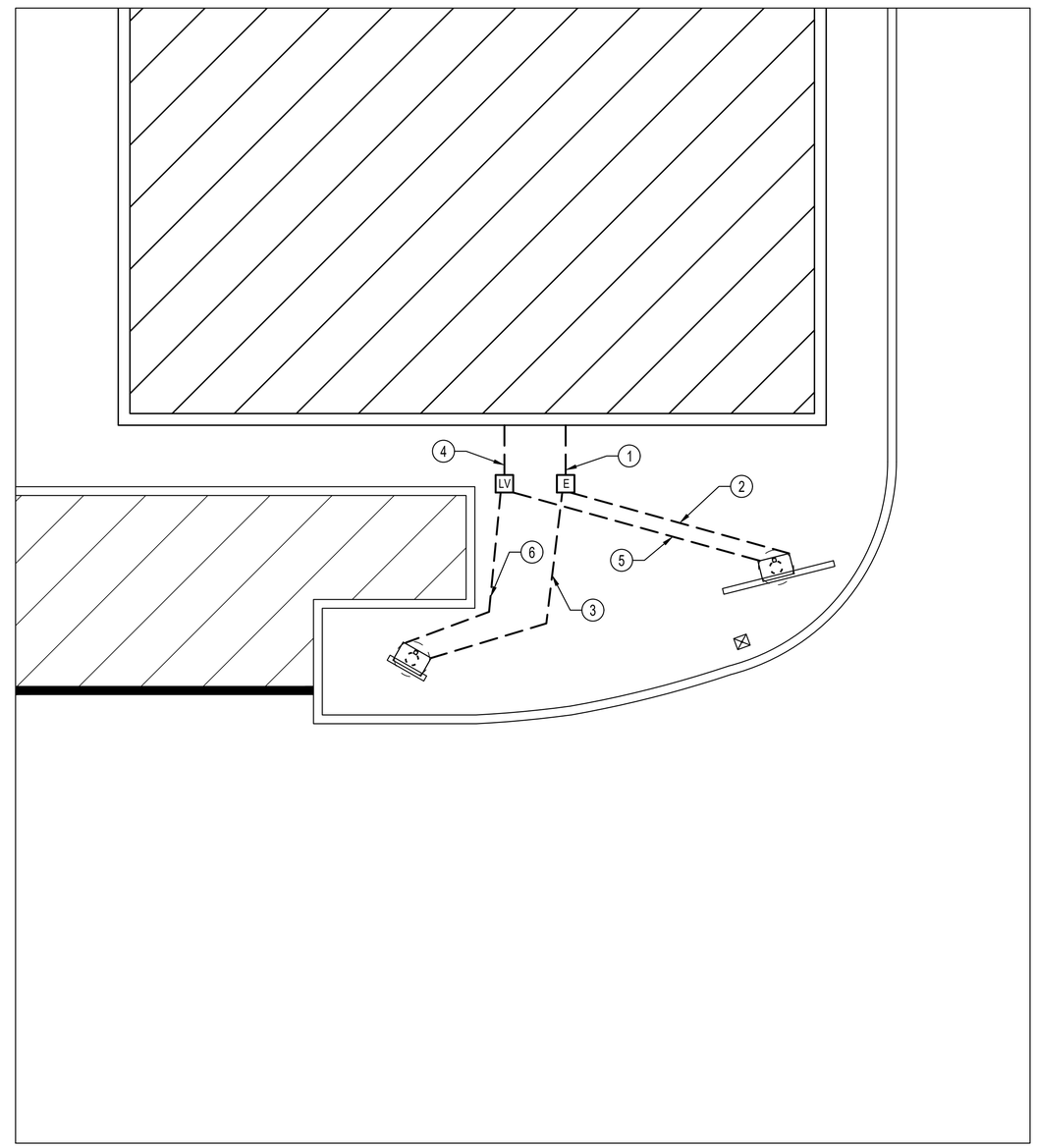

ENLARGED CONDUIT PLAN
SCALE: 1/4" = 1'-0"
NORTH

1"=20'-0" 0 20' 30'
1"=10'-0" 0 10' 15'

REV	DATE	BY	DESCRIPTION
1	10/21/2025	SFE	UPDATED DIMENSIONS ON "EXISTING SIGNAGE BOARD", C1.0

Donna A Elliott Architect
1317 Executive Blvd, Suite 200
Chesapeake, VA 23320
PH (757) 622-2828
FAX (757) 622-6883

LICENSED ARCHITECT
DONNA A. ELLIOTT
001-026-971
STATE OF ILLINOIS
10/22/2025 EXP: 11/30/24

POPEYES LOUISIANA KITCHEN
PLK 2119
SITE ADDRESS: 7 W DUNDEE RD
ARLINGTON HEIGHTS, IL 60004

DATE	7/16/2021
PROJECT	21450-84
DESIGNED	BNS
DRAWN	BNS
CHECKED	DFM

ENLARGED UTILITY PLANS

C1.1

FILE NAME: C:\Users\evans\appdata\local\temp\Acr-Publish_20984\45984A_C1_1.dwg LAYOUT NAME: Work PLOTTED: Wednesday, October 22, 2025 - 8:20am

REVISIONS					
REV	ZONE	DESCRIPTION	DATE	CHGD	CHKD

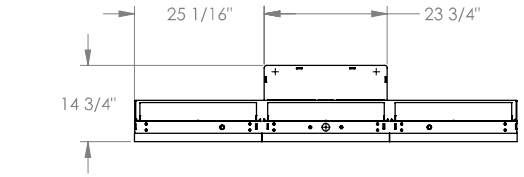

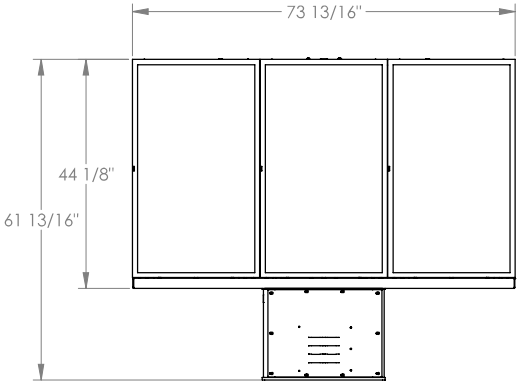

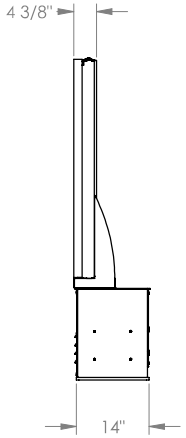

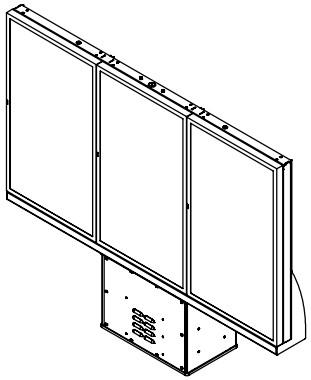

FRONT SIDE

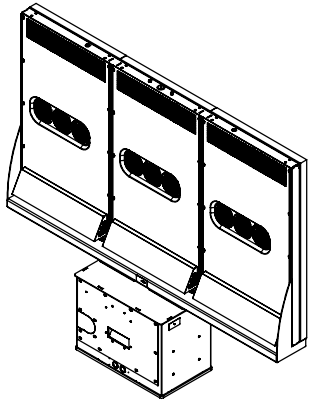

REAR SIDE

MATERIALS OF CONSTRUCTION:

- PEDESTAL: 1/2" HRPO PLATE, .179" HRPO PLATE, .105" CRS PLATE
- CABINET FRAME: 2" X 8" .188 WALL A 513 TUBE, .250" HRPO PLATE, .179" HRPO PLATE, .064" GALVANNEALED STEEL
- BACK COVERS: .050" ALUMINUM

- **SYSTEM WEIGHTS:**
- WITH DISPLAYS: 615 LBS
- WITHOUT DISPLAYS: 330 LBS

SYSTEM CERTIFICATIONS:

- UL LISTING# E495423
- CONFORMS TO UL 60950-1 and CAN/CSA C22.2 No. 60950-1-07

NU WAY INDUSTRIES INC.

NU-WAY

UNLESS OTHERWISE SPECIFIED TOLERANCE ON FRACTIONS ARE ± 1/32, TWO PLACE DECIMALS ARE ± .020, THREE PLACE DECIMALS ARE ± .010, ANGLES ARE ± 1/2°	MATERIAL	APPROVALS	DATE	DESCRIPTION: TRIPLE 46" SAMSUNG SLIM OMB
		DRAWN: JAS	4/29/20	
		CHECKED:		
		APPROVED:		
THIRD ANGLE PROJECTION	FINISH	SIZE B	DWG NO. NW463500	PART NO. NW463500 — REV 0
		DO NOT SCALE DRAWING	SCALE = 1:24	SHEET 1 OF 7

TRIPLE 46"
DIMENSIONAL DRAWING

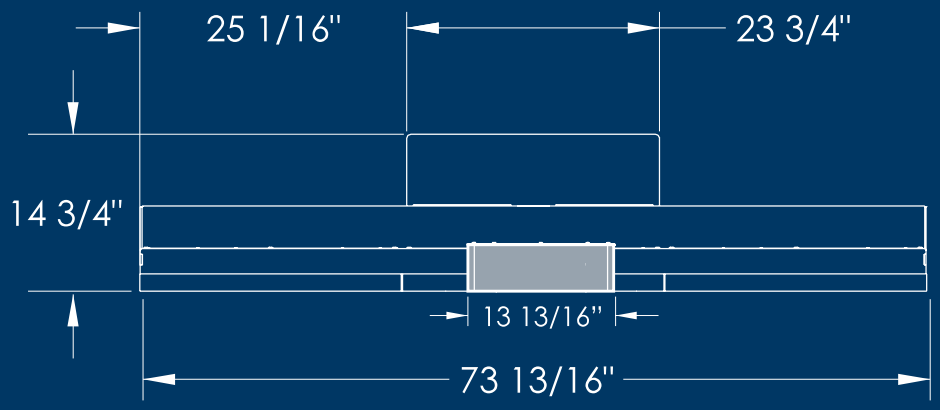

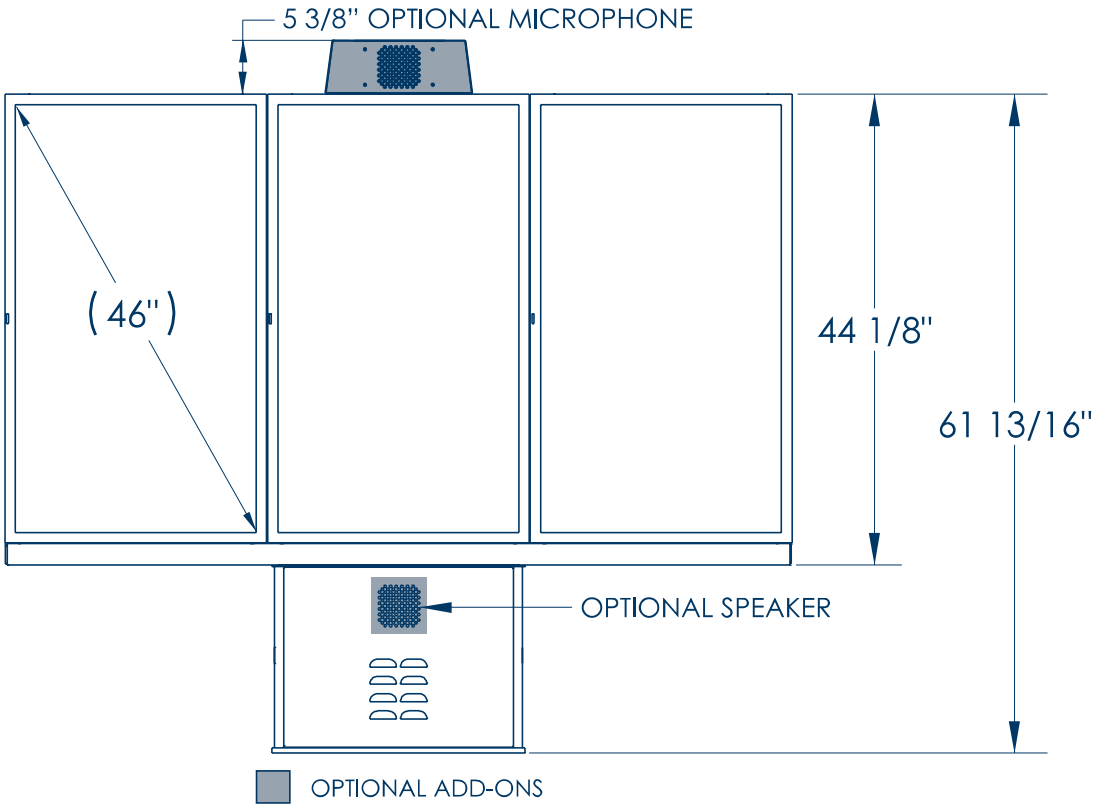

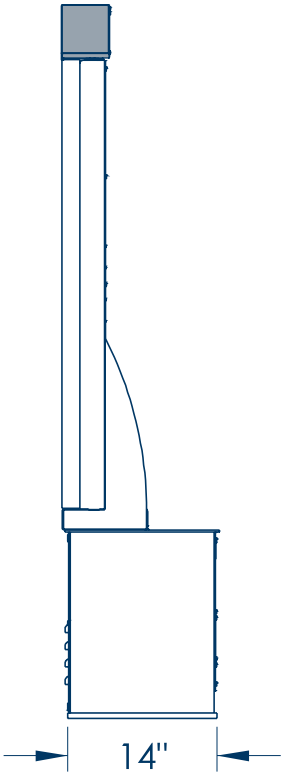

*DIMENSIONS ARE APPROXIMATE

SAMSUNG

USER MANUAL

OH46F I OH55F

The color and the appearance may differ depending on the product, and the specifications are subject to change without prior notice to improve the performance.

The contents of this manual are subject to change without notice to improve quality.

© Samsung Electronics

Samsung Electronics owns the copyright for this manual.

Use or reproduction of this manual in parts or entirety without the authorization of Samsung Electronics is prohibited.

Trademarks other than that of Samsung Electronics are owned by their respective owners.

Eco Solution

MENU → System → Eco Solution → ENTER

Eco Solution	
Power Saving Mode	Off
Eco Sensor	Off
· Minimum Backlight	0
Screen Lamp Schedule	Off
No Signal Power Off	15 minutes
Auto Power Off	Off (Recommended)

― The displayed image may differ depending on the model.

Power Saving Mode

Reduce the power consumption by adjusting the screen brightness.

- Off / Low / Medium / High

Eco Sensor

Automatically adjust the picture brightness based on the ambient light level.

- Off / On

― If the screen contrast is not sufficient, set the Eco Sensor to Off. If the Eco Sensor is Off, it may not comply with energy standards.

Minimum Backlight

Set the minimum brightness for the signage screen. This function only works if its value is lower than the value set in the Picture menu's Backlight setting.

― If Eco Sensor is On, the display brightness may change (become slightly darker or brighter) depending on the surrounding light intensity.

― Available only when Eco Sensor is set to On.

BUFFALO GROVE
ANIMAL HOSPITAL
POPEYES
LOUISIANA KITCHEN
POPEYES
LOUISIANA KITCHEN
DUNKIN'
DRIVE THRU

POPEYES
LOUISIANA KITCHEN
POPEYES
LOUISIANA KITCHEN
ONE WAY
Big Box

POPEYES
LOUISIANA KITCHEN
POPEYES
LOUISIANA KITCHEN
ONE WAY

POPEYES
LOUISIANA KITCHEN
POPEYES
LOUISIANA KITCHEN
$6
Big
Box
2
P
EXIT
ONE
WAY

POPEYES
LOUISIANA KITCHEN
$6
Big
Box
POPEYES
LOUISIANA KITCHEN

POPEYES
LOUISIANA KITCHEN
6
Big
Box
POPEYES
LOUISIANA KITCHEN
ENTER

POPEYES
LOUISIANA KITCHEN
POPEYES

Add Sizzlin' Sriracha Dippers!
POPEYES
Kids Meals
Combo Meals
Family Meals
Sides
Wings
Dessert
Drinks

POPEYES
Combo Meals
Family Meals
Sides
Wings
Dessert
Drinks
Kid's Meals
Add Sizzlin' Sriracha Dippers!
Add a Minute Maid Lemonade
Make your day LTO sweeter!
Strawberry Biscuit
Dip into the bold, zesty Signature Sauce!
425081K4
103120
103121

Add Sizzlin' Sriracha Dippers!
POPEYES
Kids Meals
Love That Lemonade
Combo Meals
Family Meals
Sides
Dessert
Drinks
Wings

popeyes | HOT ONES
Sizzlin' Sriracha Dippers 820 Cal $5.99
Smokin' Rojo Sandwich 820 Cal $5.49
Darin' Dab Ghost Wings 840-790 Cal $6.99
Lunch time
kids Meals
Love That Lemonade
$3.29
$0.70
Hot Cinnamon Apple Pie
$1.89
$2.99
Add a Premium Lemonade
Chilled or Frozen
Combo Meals
Family Meals
Sides
Dessert
Drinks
Wings
Mix & Match
Add Sizzlin' Sriracha Dippers!
Lunch time
Popeyes HOT ONES
$5.99
Welcome back to Popeyes! Please place orders at next menu board.
Welcome back to Popeyes! Please place orders at next menu board.
425081K4
103120
103121
Add a Premium Lemonade
Chilled or Frozen

425081K4
103120
103121
Add Sizzlin' Sriracha Dippers!
Popeyes HOT ONES $5.99
Buttermilk Ranch sauce is out of stock,Apologies for any inconvenience. :(
Dip into the bold, zesty Signature Sauce!
NEW
Popeyes | HOT ONES
Sizzlin' Sriracha Dippers 620 Cal $5.99
Smokin' Hain Sandwich 820 Cal $5.49
Darin' Dab Ghost Wings 640-790 Cal $6.99
LIMITED TIME
Kids Meals
HUGGS 340 Cal
HOMESTYLE MAC & CHEESE 430 Cal
MILD TENDER 300 Cal
MILD LEG 310 Cal
Strawberry Cream Cheese Pie $1.89
Hot Cinnamon Apple Pie $1.89 $2.99
Caramel Apple Cheesecake $3.79
Combo Meals
#1 The Sandwich
#2 Ghost Pepper Sandwich with Bacon & Cheese
#3 Bacon & Cheese Sandwich
#4 Signature Chicken™
#5 Tenders
#6 Wings
#7 Seafood
Family Meals
8Pc
12Pc
16Pc
Wings
6Pc
12Pc
24Pc
Mix & Match
Sides
Dessert
Drinks

UFFALO GROVE
ANIMAL HOSPITAL
POPEYES
POPEYES
LOUISIANA KITCHEN

NO THROUGH TRAFFIC
OBERWEIS DAIRY
ICE CREAM & DAIRY STORE
OBERWEIS
ICE CREAM and DAIRY STORE
'TIS THE SEASON FOR EGG NOG AND HOLIDAY FROSTBITES
ENTER
EXIT
POPEYES
LOUISIANA KITCHEN
DUNKIN'

Donald's
Welcome
Popeyes

DUNKIN'
DRIVE THRU
MARATHON

DUNKIN'
baskin BR robbins

DUNKIN'
baskin BR robbins
DRIVE THRU
DONATION
PULL

MARATHON
Service Center
Service Center

Suggested Motion for Village Board Meeting – 2/17/2026

X.B. Popeye's, Sign Variation – 7 W. Dundee Rd. – DC#25-091

Trustee _____ moved to Direct Staff and the Village Attorney to prepare final documents granting the requested sign variation relief, all as set forth in the agenda materials for tonight's Board Meeting.

Trustee _____ seconded.