AGENDA
President and Board of Trustees
Village of Arlington Heights
Board Room

Arlington Heights Village Hall
33 S. Arlington Heights Road
Arlington Heights, IL 60005
May 4, 2026
7:30 PM

I. CALL TO ORDER

II. PLEDGE OF ALLEGIANCE

A. Presentation of the Colors by Boy Scout Troop 32

III. ROLL CALL OF MEMBERS

IV. APPROVAL OF MINUTES

A. 4/20/26 Meeting Minutes

B. 3/16/26 Closed Session Minutes

C. 4/6/26 Closed Session Minutes

V. APPROVAL OF ACCOUNTS PAYABLE

A. 4/30/26 Warrant Register

VI. RECOGNITIONS AND COMMUNICATIONS

A. 107th Memorial Day Parade and Ceremony

VII. PUBLIC HEARINGS

VIII. CITIZENS TO BE HEARD

Anyone wishing to speak on a subject not on the Agenda should fill out a card, located in the back of the room, and hand it to the Village Clerk. Please limit your comments to three minutes.

IX. CONSENT AGENDA

This Agenda consists of proposals and recommendations that, in the opinion of the Village Manager, will be acceptable to all members of the Board of Trustees. The purpose of this Agenda is to save time by taking only one roll call vote instead of separate votes on each item. Consideration of this Consent Agenda will be governed by the following rules and procedures prior to roll call vote:

1. Any Trustee who wishes to vote "no" or "pass" on any Consent Agenda items should so indicate.

2. Upon the request of any one Trustee, any item will be removed from the Consent Agenda and considered separately after adoption of the Consent Agenda.

3. Citizens in the audience may request that the Board remove any item from this Consent Agenda for separate consideration after adoption of the Consent Agenda.

4. One roll call vote will be taken and will cover all remaining Consent Agenda items.

A. A Resolution Approving a Plat of Subdivision for 1920 N. Chestnut Avenue - PC#24-018

X. NEW BUSINESS

A. Appointment of Jeff Thiel to the Arlington Economic Alliance, term ending April 30, 2029

B. Appointment of Charles Wilk to the Environmental Commission, term ending April 30, 2027

C. Appointment of Annabelle Finn to the Environmental Commission, term ending April 30, 2027

D. 1903 E. Euclid Ave. - First United Methodist Church Arlington Heights, Approval of Variations, PC#25-025

E. Discussion of Pool Attendant Requirements

XI. ADJOURNMENT

The Village of Arlington Heights is committed to digital accessibility for all users. Persons with disabilities requiring auxiliary aids or services, such as an American Sign Language interpreter or written materials in accessible formats, should contact the Health & Human Services Department — located at 33 S. Arlington Heights Road, Arlington Heights, IL 60005 — at 847-368-5760 or ADA@vah.com.

MINUTES
President and Board of Trustees
Village of Arlington Heights
Board Room

Arlington Heights Village Hall
33 S. Arlington Heights Road
Arlington Heights, IL 60005
April 20, 2026
7:30 PM

I. CALL TO ORDER

II. PLEDGE OF ALLEGIANCE

III. ROLL CALL OF MEMBERS

President Tinaglia and the following Trustees responded to roll: James Bertucci, Wendy Dunnington, Colin Gilbert, Robin LaBedz, Bill Manganaro, Tom Schwingbeck, Greg Zyck. Trustee Carina Santa Maria was absent.
Also present were: Randy Recklaus, Diana Mikula, Emily Rodman, Michael Lysicatos, Chris Paperniak, Hart Passman, and Maggie Mattio.

IV. APPROVAL OF MINUTES

A. 4/6/26 Meeting Minutes

Trustee LaBedz moved to Approve. Trustee Zyck Seconded the Motion.
The Motion: Passed
Ayes: Trustee Bertucci, Trustee Gilbert, Trustee LaBedz, Trustee Manganaro, Trustee Schwingbeck, President Tinaglia, Trustee Zyck
Nays: None
Abstain: Trustee Wendy Dunnington
Absent: Trustee Santa Maria

V. APPROVAL OF ACCOUNTS PAYABLE

A. 4/15/26 Warrant Register

Trustee Bertucci moved to Approve the Warrant Register dated 4/15/26 in the amount of $4,789,881.06. Trustee Schwingbeck Seconded the Motion.
The Motion: Passed
Ayes: Trustee Bertucci, Trustee Dunnington, Trustee Gilbert, Trustee LaBedz, Trustee Manganaro, Trustee Schwingbeck, President Tinaglia, Trustee Zyck

Nays: None
Absent: Trustee Santa Maria

VI. RECOGNITIONS AND COMMUNICATIONS

VII. PUBLIC HEARINGS

VIII. CITIZENS TO BE HEARD

Anyone wishing to speak on a subject not on the Agenda should fill out a card, located in the back of the room, and hand it to the Village Clerk. Please limit your comments to three minutes.

Resident Keith Moens inquired why there were two different agendas for the Board meeting and if the re-publication of the updated agenda met the Open Meetings Act (OMA) regulations. Mr. Recklaus said the item related to the Noise Regulating Ordinance was removed from the New Business section as it was not ready to be discussed.

Residents Devin Gray and Andrij Sklierenko disagree with the adoption of the Village's Short-term Rental (STR) Ordinance. They questioned how the Board came to the decision to ban STRs and asked if they intended to reconsider the adoption of the Ordinance. They requested that the Board consider regulation options and make STRs a profitable revenue stream.

IX. CONSENT AGENDA

This Agenda consists of proposals and recommendations that, in the opinion of the Village Manager, will be acceptable to all members of the Board of Trustees. The purpose of this Agenda is to save time by taking only one roll call vote instead of separate votes on each item. Consideration of this Consent Agenda will be governed by the following rules and procedures prior to roll call vote:

1. Any Trustee who wishes to vote "no" or "pass" on any Consent Agenda items should so indicate.

2. Upon the request of any one Trustee, any item will be removed from the Consent Agenda and considered separately after adoption of the Consent Agenda.

3. Citizens in the audience may request that the Board remove any item from this Consent Agenda for separate consideration after adoption of the Consent Agenda.

4. One roll call vote will be taken and will cover all remaining Consent Agenda items.

Trustee Schwingbeck moved to Approve Items A through K and M. Trustee Dunnington Seconded the Motion.
The Motion: Passed
Ayes: Trustee Bertucci, Trustee Dunnington, Trustee Gilbert, Trustee LaBedz, Trustee Manganaro, Trustee Schwingbeck, President Tinaglia, Trustee Zyck
Nays: None
Absent: Trustee Santa Maria

A. Boards and Commissions Reappointments

B. Resolution Approving the Award of a Contract for the Furnishing of LED Streetlight Fixtures

R2026-43
A2026-31

C. Resolution Approving a Contract for Regency Court Lift Station Reconstruction

R2026-44
A2026-32

D. Resolution Approving an Agreement for Professional Engineering Services for the Regency Court Lift Station Reconstruction

R2026-45
A2026-33

E. Resolution Approving a Contract Extension for Custodial Services of Municipal Buildings

R2026-46
A2026-34

F. Resolution Approving the Award of a Contract for Trenchless Rehabilitation and Maintenance of Pipeline Infrastructure

R2026-47
A2026-35

G. An Ordinance Granting A Special Use Permit for a Large Amusement Facility (81 W. Golf Road)

2026-10

H. An Ordinance Rezoning Property to the R-3 One Family Dwelling District (1515 S. Douglas Avenue)

2026-11

I. An Ordinance Granting Variations for a Residential Development (1515 S. Douplas Avenue)

2026-12

J. A Resolution Approving a Preliminary Plat (1515 S. Douglas Avenue)

R2026-48

K. An Ordinance Granting Sign Variations (7 W. Dundee Road)

2026-13

L. An Ordinance Amending the Annual Budget of the Village of Arlington Heights, County of Cook, State of Illinois, for the Fiscal Year Beginning January 1, 2025, and Ending December 31, 2025 - General Fund Surplus

Trustee Manganaro removed this item from the consent agenda to express his concerns over the proposed use of General Fund Surplus monies that resulted from the 2025 fiscal year. He suggested deferring the proposed $500,000 transfer into the Municipal Parking Fund and $443,000 of the $3.5M transfer into the Capital Projects Fund to provide a tax abatement in the amount of $943,000. He agreed that in years when the Village proposed a 0% increase in the tax levy, any surplus should be used to fund other projects. However, in years when an increase in the tax levy is adopted, any surpluses

should be returned to property owners.

Trustee Zyck questioned if the Village was becoming reliant on surplus monies to fund other projects or assist underperforming funds.

Trustee Dunnington asked what amount each property owner would receive if the Village made an abatement with the surplus monies versus applying the surplus monies to road resurfacing. Mr. Recklaus said property owners would receive approximately $30, or the Village could repair an additional 1.4 miles of roads. Trustee Dunnington mentioned that the cost of road resurfacing was rising and suggested road diets or curb cuts to make Village roads last longer.

Mr. Recklaus said it would be difficult to budget at 100% accuracy as some expenses can be under budget and others over budget due to market changes and rising costs. The Village is committed to fiscal responsibility by saving where possible rather than spending to meet the budget. In past years when there have been surpluses, the Village maintained a flat property tax levy, issued a $1.6 million tax abatement, and eliminated certain fees such as vehicle stickers and pet licenses. Staff will continue to review annual finances and adjust as needed based on changing conditions.

Public comment was in favor of a tax abatement.

Trustee Manganaro moved to Amend the Proposed Budget Ordinance to Abate the Surplus Generated in 2025 to the 2.46% property tax levy increase of $943,000. Amend the Ordinance to Remove Item Two, the transfer of $500,000 to the Municipal Parking Fund and Reduce the Transfer to the Capital Projects Fund by $443,000. Trustee Dunnington Seconded the Motion.
The Motion: Failed
Ayes: Trustee Dunnington, Trustee Manganaro
Nays: Trustee Bertucci, Trustee Gilbert, Trustee LaBedz, Trustee Schwingbeck, President Tinaglia, Trustee Zyck
Absent: Trustee Santa Maria

Trustee Bertucci moved to Approve. Trustee LaBedz Seconded the Motion
The Motion: Passed
Ayes: Trustee Bertucci, Trustee Dunnington, Trustee Gilbert, Trustee LaBedz, Trustee Schwingbeck, President Tinaglia, Trustee Zyck
Nays: None
Abstain: Trustee Manganaro
Absent: Trustee Santa Maria

2026-14

M. An Ordinance Amending the Annual Budget of the Village of Arlington Heights, County of Cook, State of Illinois, for the Fiscal Year Beginning January 1, 2026 and Ending December 31, 2026 - United States' 250th Birthday Celebration Drone Light Show

2026-15

X. NEW BUSINESS

A. Appointment of Robert Brodecki to the Housing Commission effective May 1, 2026, term ending April 30, 2029

B. Appointment of Richard Bondarowicz to the Design Commission effective May 1, 2026, term ending April 30, 2029

C. Appointment of Joe Footlik to the Zoning Board of Appeals effective May 1, 2026, term ending April 30, 2031

D. Appointment of David Hogaboom to the Zoning Board of Appeals effective May 1, 2026, term ending April 30, 2031

E. Presentation of the Village of Arlington Heights Sustainability Plan

As part of the 2024-2025 Business Plan, the Board set a strategic priority to pursue environmentally sustainable programs and business practices within the Village. Assistant Planning Director, Michael Lysicatos, highlighted prior sustainability achievements and presented an updated Sustainability Plan developed through interdepartmental collaboration and public comment. The Sustainability Plan began with an assessment of the 2009 Energy Efficiency Conservation Strategy (EECS) and through interdepartmental dialogue a framework of seven topics was developed. The topics included energy, land, mobility, community, municipal operations, waste and recycling, and water. He highlighted the goals within each topic, what actions would be taken by the Village to achieve each goal, and an estimated timeline for completion of the goal.

The Board commended Staff for their work in developing the Sustainability Plan.

Trustee Dunnington moved to Adopt the Arlington Heights Sustainability Plan. Trustee LaBedz Seconded the Motion.
The Motion: Passed
Ayes: Trustee Bertucci, Trustee Dunnington, Trustee LaBedz, Trustee Manganaro, Trustee Schwingbeck, President Tinaglia, Trustee Zyck
Nays: None
Absent: Trustee Gilbert, Trustee Santa Maria

XI. CLOSED SESSION

5 ILCS 120/2(c)(1): appointment, employment, compensation, discipline, performance or dismissal of specific employees of the public body or legal counsel

Trustee Manganaro moved to enter into Closed Session. Trustee Zyck Seconded the Motion.
The Motion: Passed
Ayes: Trustee Bertucci, Trustee Dunnington, Trustee LaBedz, Trustee Manganaro, Trustee Schwingbeck, President Tinaglia, Trustee Zyck
Nays: None
Absent: Trustee Gilbert, Trustee Santa Maria

XII. ADJOURNMENT

Trustee Schwingbeck moved to Adjourn from Closed Session at 10:26PM. Trustee LaBedz Seconded the Motion.
The Motion: Passed
Ayes: Trustee Bertucci, Trustee Dunnington, Trustee LaBedz, Trustee Manganaro, Trustee Schwingbeck, President Tinaglia, Trustee Zyck

Nays: None
Absent: Trustee Gilbert, Trustee Santa Maria

Persons with disabilities requiring auxiliary aids or services, such as an American Sign Language interpreter or written materials in accessible formats, should contact the Health & Human Services Department, at 33 S. Arlington Heights Road, Arlington Heights, IL 60005, healthmail@vah.com or 847/368-5760.

VILLAGE OF ARLINGTON HEIGHTS

WARRANT REGISTER FOR CHECK DATE: 4/30/2026

Fund	Fund Description	Total Transaction Amount
101	GENERAL FUND	$266,515.38
215	CDBG FUND	$78.30
227	FOREIGN FIRE INS TAX FUND	$9,842.45
231	CRIMINAL INVESTIGATION FD	$100,407.70
235	MUNICIPAL PARKG OPR FUND	$47,999.79
263	TIF IV	$1,132.00
266	HICKORY KENSINGTON TIF	$117.00
267	SOUTH ARL HTS RD TIF	$3,250.50
301	DEBT SERVICE FUND	$1,102,075.00
401	CAPITAL PROJECTS FUND	$602,363.80
426	STORM WATER CONTROL FUND	$18,961.50
505	WATER AND SEWER FUND	$112,017.80
511	SOLID WASTE FUND SWANCC	$153,380.00
515	ARTS ENTERT & EVENTS FUND	$18,640.48
605	HEALTH INSURANCE FUND	$32,993.04
615	WORKERS COMPENSATION INS	$7,547.48
621	FLEET OPERATIONS FUND	$32,522.22
625	TECHNOLOGY FUND	$121,233.24
715	GUARANTY DEPOSITS FUND	$3,200.00
	TOTAL ALL FUNDS	**$2,634,277.68**

VILLAGE OF ARLINGTON HEIGHTS

WARRANT REGISTER

CHECK DATE: 4/30/2026

CHECK #	ACCOUNT #	VENDOR NAME/#	DESCRIPTION	AMOUNT	TOTAL AMOUNT
Department 0000	**NON DEPARTMENTAL**				
					$623.13
316669	101-0000-489850-	MERCHANTS' CREDIT GUIDE CO.	COLLECTION FEES	$9.03	
316669	101-0000-489850-	MERCHANTS' CREDIT GUIDE CO.	COLLECTION FEES	$614.10	
					$2,458.64
316685	101-0000-433140-	BLUE CROSS BLUE SHIELD	AMBULANCE REFUND J239521001	$2,458.64	
					$700.00
316686	715-0000-220930-	MARGARET VOGT	BOND REFUND-REC-018645-2026	$200.00	
316686	715-0000-220930-	MARGARET VOGT	BOND REFUND-REC-018645-2026	$500.00	
					$1,000.00
316687	715-0000-220930-	MATTHEW FOLEY & RACQUEL FOLEY	BOND REFUND-REC-018664-2026	**$500.00**	
316687	715-0000-220930-	MATTHEW FOLEY & RACQUEL FOLEY	BOND REFUND-REC-018664-2026	$500.00	
					$200.00
316688	715-0000-220930-	RM OLSON CONCRETE, INC	BOND REFUND-REC-018644-2026	$200.00	
					$200.00
316689	715-0000-220930-	Signature Pools & Spas, Inc.	BOND REFUND-REC-018647-2026	$200.00	
					$1,100.00
316690	715-0000-220930-	The George Sollitt Construction Company	BOND REFUND-REC-018643-2026	$200.00	
316690	715-0000-220930-	The George Sollitt Construction Company	BOND REFUND-REC-018643-2026	$200.00	
316690	715-0000-220930-	The George Sollitt Construction Company	BOND REFUND-REC-018643-2026	$200.00	
316690	715-0000-220930-	The George Sollitt Construction Company	BOND REFUND-REC-018643-2026	$500.00	
					$130.00
316691	101-0000-421990-	IZABELA SHTEREV	CONTRACT LICENSE REFUND	$130.00	
					$172.38

VILLAGE OF ARLINGTON HEIGHTS

WARRANT REGISTER

CHECK DATE: 4/30/2026

CHECK #	ACCOUNT #	VENDOR NAME/#	DESCRIPTION	AMOUNT	TOTAL AMOUNT
316692	101-0000-421200-	CHATTERJIT SINGH SAHANI	LIQUOR LICENSE REFUND	$172.38	
					$468.30
316693	505-0000-452420-	CALLERO, DEBORAH	WATER REFUND	$468.30	
					$1,580.56
316694	505-0000-452420-	POULSEN, BOB & BARB	WATER REFUND	$1,580.56	
					$599.75
802590	101-0000-210950-	RTA/CTA BENEFIT PROGRAM	EMPLOYEE RTA BENEFIT PROGRAM	$599.75	
					$9,670.16
902835	101-0000-210810-	DEARBORN LIFE INS CO	LIFE/STD INSURANCE MAY 2026	$461.56	
902835	101-0000-210810-	DEARBORN LIFE INS CO	LIFE/STD INSURANCE MAY 2026	$9,208.60	
					$5,629.19
902836	101-0000-210910-	EMPLOYEE BENEFITS CORP	HEALTH/DEPENDENT CARE FSA	$5,629.19	
					$709.04
902840	101-0000-210820-	SONTIQ	ID PROTECTION	$709.04	
			DEPARTMENT 0000 TOTAL:	$25,241.15	

VILLAGE OF ARLINGTON HEIGHTS

WARRANT REGISTER

CHECK DATE: 4/30/2026

CHECK #	ACCOUNT #	VENDOR NAME/#	DESCRIPTION	AMOUNT	TOTAL AMOUNT
Department 0101	**BOARD OF TRUSTEES ADMIN**				
					$4,500.00
316659	101-0101-521650-	LORELLE COMMUNICATIONS, INC	PROFESSIONAL SERVICES	$4,500.00	
			DEPARTMENT 0101 TOTAL:	$4,500.00	

VILLAGE OF ARLINGTON HEIGHTS

WARRANT REGISTER

CHECK DATE: 4/30/2026

CHECK #	ACCOUNT #	VENDOR NAME/#	DESCRIPTION	AMOUNT	TOTAL AMOUNT
Department 0201	**INTEGRATED SERVICES ADMIN**				
					$235.95
	101-0201-522030-	EVENTBRITE-EB	TRAVEL & TRAINING	$75.00	
	101-0201-522030-	EVENTBRITE-EB	TRAVEL & TRAINING	$75.00	
	101-0201-522030-	ILCMA	TRAVEL & TRAINING	$35.00	
	101-0201-522700-	APPLE STORE	ICLOUD STORAGE	$0.99	
	101-0201-530050-	AMAZON COM CAPITAL SERVICES	OFFICE SUPPLIES	$13.55	
	101-0201-530050-	AMAZON COM CAPITAL SERVICES	OFFICE SUPPLIES	$36.41	
					$8.33
316601	101-0201-522150-	CANON U.S.A. INC	OFFICE MACHINES & ACCESS	$8.33	
					$49,892.77
902832	101-0201-520100-	ELROD FRIEDMAN LLP	FEB 2026 LEGAL SERVICES	$49,892.77	
			DEPARTMENT 0201 TOTAL:	$50,137.05	

VILLAGE OF ARLINGTON HEIGHTS
WARRANT REGISTER
CHECK DATE: 4/30/2026

CHECK #	ACCOUNT #	VENDOR NAME/#	DESCRIPTION	AMOUNT	TOTAL AMOUNT
Department 0301	**HUMAN RESOURCES ADMIN**				
					$1,379.23
	101-0301-520050-	CONSENSUS CLOUD SOLUTIONS	FAX FEE	$49.99	
	101-0301-520050-	NORTHERN IL UNIVERSITY	TRAVEL & TRAINING	$125.00	
	101-0301-520050-	NORTHERN IL UNIVERSITY	TRAVEL & TRAINING	$175.00	
	101-0301-522010-	APWA CHICAGO METRO CHAPTER	ADVERTISING	$25.00	
	101-0301-522010-	APWA CHICAGO METRO CHAPTER	ADVERTISING	$25.00	
	101-0301-522010-	APWA CHICAGO METRO CHAPTER	ADVERTISING	$25.00	
	101-0301-522010-	LINKEDIN CORPORATION	SUBSCRIPTION	$169.99	
	101-0301-540700-	FAUSTOS ITALIAN KITCHEN & CATERING	EVENT SUPPLIES	$88.39	
	101-0301-540700-	SAMS CLUB	EVENT SUPPLIES	$100.94	
	101-0301-540700-	GORDON FOOD SERVICE	EVENT SUPPLIES	$45.98	
	101-0301-540700-	CANVA US, INC.	PRINTING SERVICES	$58.30	
	615-0301-520450-	IL WORKERS COMPENSATION COMMISSION	PROFESSIONAL SERVICES	$490.64	
					$82.42
316584	101-0301-530050-	AMAZON COM CAPITAL SERVICES	OFFICE SUPPLIES	$82.42	
					$48.51
316601	101-0301-522150-	CANON U.S.A. INC	OFFICE MACHINES & ACCESS	$48.51	
					$11,705.00
316680	605-0301-520500-	NORTHWEST COMMUNITY HOSPITAL	BIENNIAL PHYSICALS AND TESTING	$40.00	
316680	605-0301-520500-	NORTHWEST COMMUNITY HOSPITAL	BIENNIAL PHYSICALS AND TESTING	$1,740.00	
316680	605-0301-520500-	NORTHWEST COMMUNITY HOSPITAL	BIENNIAL PHYSICALS AND TESTING	$3,125.00	
316680	605-0301-520500-	NORTHWEST COMMUNITY HOSPITAL	BIENNIAL PHYSICALS AND TESTING	$6,800.00	
					$130.80
316699	101-0301-540700-	PETTY CASH	MISCELLANEOUS SUPPLIES	$73.96	

VILLAGE OF ARLINGTON HEIGHTS
WARRANT REGISTER
CHECK DATE: 4/30/2026

CHECK #	ACCOUNT #	VENDOR NAME/#	DESCRIPTION	AMOUNT	TOTAL AMOUNT
316699	615-0301-522030-	PETTY CASH	TRAVEL & TRAINING	$56.84	
					$7,000.00
316717	615-0301-520200-	SRSD CONSULTING LLC	TRAVEL & TRAINING	$3,500.00	
316717	615-0301-520500-	SRSD CONSULTING LLC	TRAVEL & TRAINING	$3,500.00	
					$8,424.98
902835	605-0301-520650-	DEARBORN LIFE INS CO	LIFE/STD INSURANCE MAY 2026	$298.33	
902835	605-0301-520650-	DEARBORN LIFE INS CO	LIFE/STD INSURANCE MAY 2026	$706.50	
902835	605-0301-520650-	DEARBORN LIFE INS CO	LIFE/STD INSURANCE MAY 2026	$3,304.85	
902835	605-0301-520660-	DEARBORN LIFE INS CO	LIFE/STD INSURANCE MAY 2026	$590.10	
902835	605-0301-520660-	DEARBORN LIFE INS CO	LIFE/STD INSURANCE MAY 2026	$3,525.20	
					$11,957.84
902838	605-0301-520450-	BENISTAR/HARTFORD - 6795	RETIREE INSURANCE	$272.00	
902838	605-0301-542750-	BENISTAR/HARTFORD - 6795	RETIREE INSURANCE	$11,685.84	
					$905.22
902839	605-0301-520440-	EMPLOYEE BENEFITS CORP	FSA ADMIN FEES	$8.24	
902839	605-0301-520440-	EMPLOYEE BENEFITS CORP	FSA ADMIN FEES	$216.30	
902839	605-0301-520440-	EMPLOYEE BENEFITS CORP	FSA ADMIN FEES	$680.68	
			DEPARTMENT 0301 TOTAL:	$41,634.00	

VILLAGE OF ARLINGTON HEIGHTS
WARRANT REGISTER
CHECK DATE: 4/30/2026

CHECK #	ACCOUNT #	VENDOR NAME/#	DESCRIPTION	AMOUNT	TOTAL AMOUNT
Department 0501	**FINANCE ADMIN**				
					$295.00
	101-0501-522020-	NIGP INSTITUTE FOR PUBLIC PROCUREMENT	DUES	$195.00	
	101-0501-522030-	IL GFOA	TRAVEL AND TRAINING	$100.00	
					$124.01
316584	101-0501-530050-	AMAZON COM CAPITAL SERVICES	OFFICE SUPPLIES	$13.05	
316584	101-0501-530050-	AMAZON COM CAPITAL SERVICES	OFFICE SUPPLIES	$26.60	
316584	101-0501-530050-	AMAZON COM CAPITAL SERVICES	OFFICE SUPPLIES	$84.36	
					$44.22
316601	101-0501-522150-	CANON U.S.A. INC	OFFICE MACHINES & ACCESS	$44.22	
					$363.84
316609	101-0501-521655-	CIVICPLUS LLC	SOFTWARE	$363.84	
					$413.10
316620	101-0501-522010-	DAILY HERALD MEDIA GROUP	ADVERTISING	$413.10	
					$11,363.86
316630	101-0501-520231-	EMS MANAGEMENT & CONSULTANTS, INC	FINANCIAL SERVICES	$11,363.86	
					$308.40
316683	101-0501-530050-	ODP BUSINESS SOLUTIONS	OFFICE SUPPLIES	($217.78)	
316683	101-0501-530050-	ODP BUSINESS SOLUTIONS	OFFICE SUPPLIES	($12.57)	
316683	101-0501-530050-	ODP BUSINESS SOLUTIONS	OFFICE SUPPLIES	$122.44	
316683	101-0501-530050-	ODP BUSINESS SOLUTIONS	OFFICE SUPPLIES	$155.13	
316683	101-0501-530050-	ODP BUSINESS SOLUTIONS	OFFICE SUPPLIES	$261.18	
					$1,080.00
316702	101-0501-522050-	POSTMASTER ARLINGTON HEIGHTS	ANNUAL MAINTENANCE FEE	$1,080.00	
					$3,496.38

VILLAGE OF ARLINGTON HEIGHTS

WARRANT REGISTER

CHECK DATE: 4/30/2026

CHECK #	ACCOUNT #	VENDOR NAME/#	DESCRIPTION	AMOUNT	TOTAL AMOUNT
902830	101-0501-522050-	CITIBANK	POSTAGE	$3,496.38	
					$4,624.24
902837	505-0501-522050-	SEBIS DIRECT INC	POSTAGE	$4,624.24	
			DEPARTMENT 0501 TOTAL:	$22,113.05	

VILLAGE OF ARLINGTON HEIGHTS
WARRANT REGISTER
CHECK DATE: 4/30/2026

CHECK #	ACCOUNT #	VENDOR NAME/#	DESCRIPTION	AMOUNT	TOTAL AMOUNT
Department 0601	**INFORMATION TECHNOLOGY ADMIN**				
					$3,449.73
	625-0601-521020-	DELL MARKETING LP	SOFTWARE	$298.68	
	625-0601-521655-	JOTFORM, INC	SOFTWARE	$594.00	
	625-0601-521655-	WASABI TECHNOLOGIES, LLC	SOFTWARE	$38.47	
	625-0601-521655-	ANTHROPIC, PBC	SOFTWARE	$20.00	
	625-0601-521655-	WASABI TECHNOLOGIES, LLC	SOFTWARE	$42.60	
	625-0601-521655-	CDW GOVERNMENT INC	SOFTWARE	$152.49	
	625-0601-522700-	AT&T	INTERNET SERVICES	$81.20	
	625-0601-522700-	VERIZON WIRELESS	MONTHLY DATA CHARGES	$911.75	
	625-0601-522700-	VERIZON WIRELESS	MONTHLY DATA CHARGES	$196.95	
	625-0601-522700-	COMCAST CABLE	INTERNET CHARGES	$133.90	
	625-0601-550100-	CDW GOVERNMENT INC	OFFICE EQUIPMENT	$686.19	
	625-0601-550100-	UBIQUITI INC	OFFICE EQUIPMENT	$293.50	
					$34.92
316584	625-0601-550100-	AMAZON COM CAPITAL SERVICES	OFFICE SUPPLIES	$5.49	
316584	625-0601-550100-	AMAZON COM CAPITAL SERVICES	OFFICE SUPPLIES	$9.49	
316584	625-0601-550100-	AMAZON COM CAPITAL SERVICES	OFFICE SUPPLIES	$19.94	
					$4,018.00
316602	625-0601-550100-	CDS OFFICE TECHNOLOGIES	OFFICE EQUIPMENT	$4,018.00	
					$1,090.89
316603	625-0601-521020-	CDW GOVERNMENT INC	OFFICE EQUIPMENT	$1,090.89	
					$12,486.72
316622	625-0601-550100-	DELL MARKETING LP	OFFICE EQUIPMENT	$12,486.72	
					$185.94
316648	625-0601-530050-	IT1 SOURCE, LLC	OFFICE SUPPLIES	$50.70	

VILLAGE OF ARLINGTON HEIGHTS

WARRANT REGISTER

CHECK DATE: 4/30/2026

CHECK #	ACCOUNT #	VENDOR NAME/#	DESCRIPTION	AMOUNT	TOTAL AMOUNT
316648	625-0601-530050-	IT1 SOURCE, LLC	OFFICE SUPPLIES	$135.24	
					$9,400.00
316707	625-0601-521655-	REVIZE LLC	SOFTWARE	$9,400.00	
					$90,567.04
902833	625-0601-520390-	OPENGOV, INC	BUDGET SOFTWARE	$90,567.04	
			DEPARTMENT 0601 TOTAL:	$121,233.24	

VILLAGE OF ARLINGTON HEIGHTS

WARRANT REGISTER

CHECK DATE: 4/30/2026

CHECK #	ACCOUNT #	VENDOR NAME/#	DESCRIPTION	AMOUNT	TOTAL AMOUNT
Department 1008	**BOARDS & COMM FIRE & POL COMM**				
					$40.00
	101-1008-522010-	ILCMA	MEMBERSHIP LEGACY PROJECT	$40.00	
			DEPARTMENT 1008 TOTAL:	$40.00	

VILLAGE OF ARLINGTON HEIGHTS

WARRANT REGISTER

CHECK DATE: 4/30/2026

CHECK #	ACCOUNT #	VENDOR NAME/#	DESCRIPTION	AMOUNT	TOTAL AMOUNT
Department 1014	**BOARDS & COMM YOUTH**				
					$249.28
	101-1014-533050-	JEWEL OSCO 3422	EVENT SUPPLIES	$249.28	
			DEPARTMENT 1014 TOTAL:	$249.28	

VILLAGE OF ARLINGTON HEIGHTS

WARRANT REGISTER

CHECK DATE: 4/30/2026

CHECK #	ACCOUNT #	VENDOR NAME/#	DESCRIPTION	AMOUNT	TOTAL AMOUNT
Department 1018	**BOARDS & COMM SPECIAL EVENTS**				
	515-1018-540550-	BOUNCE HOUSES R US LLC	SWING INTO SPRING BOUNCE HOUSE	$1,443.00	**$1,443.00**
316728	515-1018-540550-	TWISTICITY LLC	EVENT SERVICES	$900.00	**$900.00**
			DEPARTMENT 1018 TOTAL:	$2,343.00	

VILLAGE OF ARLINGTON HEIGHTS

WARRANT REGISTER

CHECK DATE: 4/30/2026

CHECK #	ACCOUNT #	VENDOR NAME/#	DESCRIPTION	AMOUNT	TOTAL AMOUNT
Department 2005	**SPECIAL EVENTS METROPOLIS THTR**				
					$12,059.87
316639	515-2005-550550-	FULL COMPASS SYSTEMS LTD	METROPOLIS EQUIPMENT	$12,059.87	
			DEPARTMENT 2005 TOTAL:	$12,059.87	

VILLAGE OF ARLINGTON HEIGHTS
WARRANT REGISTER
CHECK DATE: 4/30/2026

CHECK #	ACCOUNT #	VENDOR NAME/#	DESCRIPTION	AMOUNT	TOTAL AMOUNT
Department 3001	**POLICE DEPT ADMIN**				
					$13,300.77
	101-3001-521650-	ILLINOIS SECRETARY OF STATE	PROFESSIONAL SERVICES	$21.00	
	101-3001-521650-	IL SECRETARY OF STATE	PROFESSIONAL SERVICES	$21.00	
	101-3001-521650-	COMCAST CABLE	PROFESSIONAL SERVICES	$138.49	
	101-3001-521655-	JAMF SOFTWARE, LLC	SOFTWARE	$276.00	
	101-3001-522020-	SAFE KIDS WORLDWIDE	TRAINING	$55.00	
	101-3001-522030-	IL SECRETARY OF STATE	TRAINING	$16.00	
	101-3001-522030-	NATIONAL ALLIANCE FOR CHILDREN'S GRIEF	TRAINING	$45.00	
	101-3001-522030-	ICNA	TRAINING	$75.00	
	101-3001-522030-	AMERICAN ASSOCIATION OF NOTARIES	TRAINING	$112.34	
	101-3001-522030-	FAIRFIELD INN	TRAINING	$128.88	
	101-3001-522030-	FBINAA	TRAINING	$280.00	
	101-3001-522030-	PRI MANAGEMENT GROUP	TRAINING	$299.00	
	101-3001-522030-	SAVAGE TRAINING GROUP	TRAINING	$299.00	
	101-3001-522030-	IL DIVISION IAI	TRAINING	$325.00	
	101-3001-522030-	IL DIVISION IAI	TRAINING	$325.00	
	101-3001-522030-	UNITED AIRLINES	TRAINING	$357.37	
	101-3001-522030-	UNITED AIRLINES	TRAINING	$561.15	
	101-3001-522030-	SOSUITE AT INDEPENDENCE LOFTS	TRAINING	$572.39	
	101-3001-522030-	INSTITUTE OF POLICE TECNNOLOGY AND MANAGEMENT	TRAINING	$1,095.00	
	101-3001-522030-	MIDWEST CENTER FOR TRAFFIC SAFETY	TRAINING	$1,350.00	
	101-3001-522030-	SOSUITE AT INDEPENDENCE LOFTS	TRAINING	$75.00	
	101-3001-530010-	CHICAGO TRIBUNE-SUB BILLING	SUBSCRIPTION	$14.00	

VILLAGE OF ARLINGTON HEIGHTS
WARRANT REGISTER
CHECK DATE: 4/30/2026

CHECK #	ACCOUNT #	VENDOR NAME/#	DESCRIPTION	AMOUNT	TOTAL AMOUNT
	101-3001-530050-	NINOS PIZZERIA & CATERING	MEETING SUPPLIES	$102.70	
	101-3001-530050-	JIMMY JOHNS	MEETING SUPPLIES	$79.99	
	101-3001-530050-	JEWEL OSCO 3422	MEETING SUPPLIES	$2.99	
	101-3001-530350-	SAMS CLUB	UNIFORMS	$53.79	
	101-3001-530350-	5.11 TACTICAL	UNIFORMS	$100.00	
	101-3001-530350-	5.11 TACTICAL	UNIFORMS	$190.00	
	101-3001-530350-	5.11 TACTICAL	UNIFORMS	$350.00	
	101-3001-530350-	GEMPLERS	UNIFORMS	$719.96	
	101-3001-530350-	GEMPLERS	UNIFORMS	$1,277.15	
	101-3001-533050-	GATSBY'S PUB	EVENT SUPPLIES	$408.62	
	101-3001-533050-	BADGE & WALLET	UNIFORMS	$210.05	
	101-3001-533250-	ABT ELECTRONICS	EQUIPMENT	$3,363.90	
					$8,054.55
316579	101-3001-521651-	ADORAMA INC	EQUIPMENT	$8,054.55	
					$173.74
316584	101-3001-530050-	AMAZON COM CAPITAL SERVICES	POLICE SUPPLIES	$173.74	
					$456,273.18
316593	401-3001-550150-	AXON ENTERPRISE INC	POLICE EQUIPMENT	$456,273.18	
					$1,794.00
316595	101-3001-522100-	BELMONTE PRINTING CO	PRINTING SERVICES	$1,794.00	
					$13,775.00
316598	101-3001-521651-	BRIGHTSIDE RECOVERY, LTD.	CARE GRANT	$13,775.00	
					$212.69
316601	101-3001-522150-	CANON U.S.A. INC	OFFICE MACHINES & ACCESS	$53.57	
316601	101-3001-522150-	CANON U.S.A. INC	OFFICE MACHINES & ACCESS	$159.12	
					$665.00

VILLAGE OF ARLINGTON HEIGHTS

WARRANT REGISTER

CHECK DATE: 4/30/2026

CHECK #	ACCOUNT #	VENDOR NAME/#	DESCRIPTION	AMOUNT	TOTAL AMOUNT
316613	101-3001-521650-	COMPASSION FUNERAL SERVICES INC	PROFESSIONAL SERVICES	$320.00	
316613	101-3001-521650-	COMPASSION FUNERAL SERVICES INC	PROFESSIONAL SERVICES	$345.00	
					$106.25
316618	101-3001-530050-	CROWN TROPHY	POLICE SUPPLIES	$106.25	
					$449.00
316621	101-3001-521655-	DATACOM SOFTWARE SOLUTIONS	SOFTWARE	$449.00	
					$1,423.00
316631	101-3001-521650-	ENDEAVOR HEALTH OMEGA	PROFESSIONAL SERVICES	$579.00	
316631	101-3001-521650-	ENDEAVOR HEALTH OMEGA	PROFESSIONAL SERVICES	$844.00	
					$310.50
316640	101-3001-530050-	GRAINGER W W INC	POLICE SUPPLIES	$27.60	
316640	101-3001-530050-	GRAINGER W W INC	POLICE SUPPLIES	$282.90	
					$165.00
316645	101-3001-521650-	HILLSIDE AUTO BODY SERVICES	PROFESSIONAL SERVICES	$165.00	
					$1,505.00
316650	101-3001-530350-	JG UNIFORMS	UNIFORMS	$1,505.00	
					$2,733.28
316658	101-3001-521651-	LIVE 4 LALI INC	CARE GRANT	$2,733.28	
					$2,881.00
316662	101-3001-521652-	MARQUARDT & BELMONTE, P.C.	PROFESSIONAL SERVICES	$2,881.00	
					$105.00
316678	101-3001-522030-	NORTH EAST MULTI REGIONAL TRAINING	TRAINING	$105.00	
					$1,936.74
316700	101-3001-522020-	PETTY CASH/POLICE	POLICE PETTY CASH	$100.00	
316700	101-3001-522030-	PETTY CASH/POLICE	POLICE PETTY CASH	$1,836.74	

VILLAGE OF ARLINGTON HEIGHTS

WARRANT REGISTER

CHECK DATE: 4/30/2026

CHECK #	ACCOUNT #	VENDOR NAME/#	DESCRIPTION	AMOUNT	TOTAL AMOUNT
					$137.93
316712	101-3001-522030-	SEAN O'BRIEN	TRAVEL AND TRAINING	$137.93	
					$250.00
316722	101-3001-521650-	T MOBILE USA INC	PROFESSIONAL SERVICES	$250.00	
					$6,289.85
316730	401-3001-550150-	ULTRA STROBE COMMUNICATIONS INC	POLICE EQUIPMENT	$6,289.85	
					$540.00
316734	101-3001-521650-	VINSON, JONATHAN	REIMBURSEMENT	$540.00	
			DEPARTMENT 3001 TOTAL:	$513,081.48	

VILLAGE OF ARLINGTON HEIGHTS

WARRANT REGISTER

CHECK DATE: 4/30/2026

CHECK #	ACCOUNT #	VENDOR NAME/#	DESCRIPTION	AMOUNT	TOTAL AMOUNT
Department 3003	**POLICE DEPT CRIMINAL INVEST**				
					$100,000.00
316593	231-3003-540110-	AXON ENTERPRISE INC	POLICE EQUIPMENT	$100,000.00	
					$169.18
316698	231-3003-540010-	PET PROS LLC	K9 SUPPLIES	$169.18	
					$238.52
316704	231-3003-540010-	PSP STORES LLC	K9 SUPPLIES	$28.56	
316704	231-3003-540010-	PSP STORES LLC	K9 SUPPLIES	$209.96	
			DEPARTMENT 3003 TOTAL:	$100,407.70	

VILLAGE OF ARLINGTON HEIGHTS
WARRANT REGISTER
CHECK DATE: 4/30/2026

CHECK #	ACCOUNT #	VENDOR NAME/#	DESCRIPTION	AMOUNT	TOTAL AMOUNT
Department 3501	**FIRE ADMIN**				
					$1,356.59
	101-3501-521655-	TEAM SNAP WORLD	SOFTWARE	$79.99	
	101-3501-521655-	CANVA US, INC.	SOFTWARE	$119.99	
	101-3501-522020-	METROPOLITAN FIRE CHIEFS ASSN	DUES	$50.00	
	101-3501-522020-	METROPOLITAN FIRE CHIEFS ASSN	DUES	$50.00	
	101-3501-522030-	METROPOLITAN FIRE CHIEFS ASSN	TRAVEL AND TRAINING	$360.00	
	101-3501-530350-	BADGE & WALLET	UNIFORM ACCESSORIES	$349.95	
	101-3501-533500-	AMERICAN HEART ASSOCIATION	CPR INSTRUCTOR SUPPLIES	$11.06	
	401-3501-550150-	FIRE SUPPLY DEPOT	NEW AMBULANCE EQUIPMENT	$335.60	
					$3,659.00
316582	101-3501-531650-	AIR ONE EQUIPMENT	FIRE SUPPLIES	$281.00	
316582	101-3501-531650-	AIR ONE EQUIPMENT	FIRE SUPPLIES	$904.00	
316582	101-3501-531850-	AIR ONE EQUIPMENT	EQUIPMENT	$1,994.00	
316582	401-3501-550150-	AIR ONE EQUIPMENT	CLOTHING & APPAREL	$480.00	
					$839.74
316584	101-3501-521110-	AMAZON COM CAPITAL SERVICES	JANITORIAL SUPPLIES	$7.57	
316584	101-3501-521110-	AMAZON COM CAPITAL SERVICES	JANITORIAL SUPPLIES	$72.40	
316584	101-3501-530050-	AMAZON COM CAPITAL SERVICES	JANITORIAL SUPPLIES	$6.99	
316584	101-3501-532800-	AMAZON COM CAPITAL SERVICES	BOOKS	$178.59	
316584	101-3501-533450-	AMAZON COM CAPITAL SERVICES	FIRE EQUIPMENT	$574.19	
					$2,386.00
316603	401-3501-550150-	CDW GOVERNMENT INC	OFFICE EQUIPMENT	$2,386.00	
					$4,393.89
316624	401-3501-550150-	DINGES FIRE COMPANY	CLOTHING & APPAREL	$4,393.89	
					$125.00

VILLAGE OF ARLINGTON HEIGHTS

WARRANT REGISTER

CHECK DATE: 4/30/2026

CHECK #	ACCOUNT #	VENDOR NAME/#	DESCRIPTION	AMOUNT	TOTAL AMOUNT
316634	101-3501-522020-	FIRE INVESTIGATORS STRIKE FORCE	DUES	$125.00	
					$116.50
316635	401-3501-550150-	FIRESERVICE MANAGEMENT	CLOTHING & APPAREL	$116.50	
					$115.46
316663	101-3501-531650-	MATTS ACE HARDWARE	FIRE SUPPLIES	$36.98	
316663	101-3501-531650-	MATTS ACE HARDWARE	FIRE SUPPLIES	$78.48	
					$433.50
316670	101-3501-531650-	MES SERVICE COMPANY, LLC	FIRE SUPPLIES	$433.50	
					$39,848.00
316677	401-3501-550150-	NORTH CENTRAL EMERGENCY VEHICLES	VEHICLE PURCHASE	$39,848.00	
					$192.00
316679	101-3501-521655-	NORTHWEST CENTRAL 9-1-1 SYSTEM	SOFTWARE	$192.00	
					$75.00
316681	101-3501-521160-	NORTHWEST COMMUNITY HOSP	TRAINING	$75.00	
					$2,850.00
316708	101-3501-522030-	ROMEOVILLE FIRE DEPARTMENT	TRAVEL AND TRAINING	$600.00	
316708	101-3501-522030-	ROMEOVILLE FIRE DEPARTMENT	TRAVEL AND TRAINING	$2,250.00	
					$1,973.72
316720	101-3501-522030-	STEMPIEN, JAMES	TUITION REIMBURSEMENT	$1,973.72	
					$658.55
316724	101-3501-530350-	TODAY'S UNIFORMS	UNIFORMS AND RELATED ITEMS	$75.95	
316724	101-3501-530350-	TODAY'S UNIFORMS	UNIFORMS AND RELATED ITEMS	$157.90	
316724	101-3501-530350-	TODAY'S UNIFORMS	UNIFORMS AND RELATED ITEMS	$187.85	
316724	101-3501-530350-	TODAY'S UNIFORMS	UNIFORMS AND RELATED ITEMS	$236.85	
					$43.58

VILLAGE OF ARLINGTON HEIGHTS

WARRANT REGISTER

CHECK DATE: 4/30/2026

CHECK #	ACCOUNT #	VENDOR NAME/#	DESCRIPTION	AMOUNT	TOTAL AMOUNT
316735	101-3501-531650-	VISION MARKETING	FIRE SUPPLIES	$43.58	
					$2,329.99
316736	101-3501-531850-	W.S. DARLEY & CO	FIRE EQUIPMENT	$202.04	
316736	401-3501-550150-	W.S. DARLEY & CO	NEW AMBULANCE EQUIPMENT	$2,127.95	
			DEPARTMENT 3501 TOTAL:	$61,396.52	

VILLAGE OF ARLINGTON HEIGHTS

WARRANT REGISTER

CHECK DATE: 4/30/2026

CHECK #	ACCOUNT #	VENDOR NAME/#	DESCRIPTION	AMOUNT	TOTAL AMOUNT
Department 3701	**FOREIGN FIRE INSURANCE ADMIN**				
	227-3701-521650-	IFIT INC.	SOFTWARE	$396.00	**$396.00**
316655	227-3701-550150-	KING TRAINING INNOVATIONS LLC	BUILDING MAINTENANCE SUPPLY	$9,446.45	**$9,446.45**
			DEPARTMENT 3701 TOTAL:	$9,842.45	

VILLAGE OF ARLINGTON HEIGHTS

WARRANT REGISTER

CHECK DATE: 4/30/2026

CHECK #	ACCOUNT #	VENDOR NAME/#	DESCRIPTION	AMOUNT	TOTAL AMOUNT
Department 4001	**PLANNING PLANNING**				
					$1,291.29
	101-4001-522020-	AMERICAN PLANNING ASSOC	DUES	$776.50	
	101-4001-522030-	DELTA AIR LINES, INC.	TRAVEL & TRAINING	$312.80	
	101-4001-522030-	INTERNATIONAL COUNCIL OF SHOPPING CTRS	TRAVEL & TRAINING	$80.00	
	101-4001-522030-	BROOKHAVEN MARKET	EVENT SUPPLIES	$62.98	
	101-4001-530050-	AMAZON COM CAPITAL SERVICES	OFFICE SUPPLIES	$59.01	
					$17.78
316601	101-4001-522150-	CANON U.S.A. INC	OFFICE MACHINES & ACCESS	$17.78	
					$2,859.00
316606	267-4001-520050-	CHRISTOPHER B BURKE LTD	PROFESSIONAL SERVICES	$2,859.00	
					$129.60
316620	101-4001-522010-	DAILY HERALD MEDIA GROUP	ADVERTISING	$129.60	
					$1,800.00
316638	101-4001-540400-	FRANCE MEDIA INC	ADVERTISING	$1,800.00	
					$741.00
316657	101-4001-521650-	LEGRAND REPORTING & VIDEO SERVICES	PROFESSIONAL SERVICES	$370.50	
316657	101-4001-521650-	LEGRAND REPORTING & VIDEO SERVICES	PROFESSIONAL SERVICES	$370.50	
					$379.90
316714	515-4001-533050-	SIGNS BY TOMORROW	PRINTING SERVICES	$379.90	
					$1,640.50
902832	263-4001-520050-	ELROD FRIEDMAN LLP	FEB 2026 LEGAL SERVICES	$1,132.00	
902832	266-4001-520050-	ELROD FRIEDMAN LLP	FEB 2026 LEGAL SERVICES	$117.00	
902832	267-4001-520050-	ELROD FRIEDMAN LLP	FEB 2026 LEGAL SERVICES	$391.50	
			DEPARTMENT 4001 TOTAL:	$8,859.07	

VILLAGE OF ARLINGTON HEIGHTS

WARRANT REGISTER

CHECK DATE: 4/30/2026

CHECK #	ACCOUNT #	VENDOR NAME/#	DESCRIPTION	AMOUNT	TOTAL AMOUNT
Department 4101	**COMMUNITY DEVL BLK GRNTADMIN**				
					$78.30
316620	215-4101-541020-	DAILY HERALD MEDIA GROUP	ADVERTISING	$78.30	
			DEPARTMENT 4101 TOTAL:	$78.30	

VILLAGE OF ARLINGTON HEIGHTS

WARRANT REGISTER

CHECK DATE: 4/30/2026

CHECK #	ACCOUNT #	VENDOR NAME/#	DESCRIPTION	AMOUNT	TOTAL AMOUNT
Department 4501	**BUILDING ADMIN**				
					$4,151.60
	101-4501-522020-	NORTHWEST BOCA	DUES	$50.00	
	101-4501-522020-	INTL CODE COUNCIL INC	DUES	$105.00	
	101-4501-522030-	INTL CODE COUNCIL INC	TRAVEL & TRAINING	$138.00	
	101-4501-522030-	INTL CODE COUNCIL INC	TRAVEL & TRAINING	$138.00	
	101-4501-522030-	ILLINOIS TOLLWAY	TRAVEL & TRAINING	$3.00	
	101-4501-522030-	NORTHWEST BOCA	TRAVEL & TRAINING	$60.00	
	101-4501-522030-	SUBURBAN BLDG OFFICALS CONFER	TRAVEL & TRAINING	$1,350.00	
	101-4501-522030-	SUBURBAN BLDG OFFICALS CONFER	TRAVEL & TRAINING	$1,050.00	
	101-4501-522030-	SUBURBAN BLDG OFFICALS CONFER	TRAVEL & TRAINING	$30.00	
	101-4501-522030-	SUBURBAN BLDG OFFICALS CONFER	TRAVEL & TRAINING	$30.00	
	101-4501-522030-	SUBURBAN BLDG OFFICALS CONFER	TRAVEL & TRAINING	$90.00	
	101-4501-522030-	SUBURBAN BLDG OFFICALS CONFER	TRAVEL & TRAINING	$30.00	
	101-4501-522030-	SUBURBAN BLDG OFFICALS CONFER	TRAVEL & TRAINING	$30.00	
	101-4501-522030-	SUBURBAN BLDG OFFICALS CONFER	TRAVEL & TRAINING	$60.00	
	101-4501-522030-	SUBURBAN BLDG OFFICALS CONFER	TRAVEL & TRAINING	$30.00	
	101-4501-522030-	SUBURBAN BLDG OFFICALS CONFER	TRAVEL & TRAINING	$30.00	
	101-4501-522030-	SUBURBAN BLDG OFFICALS CONFER	TRAVEL & TRAINING	$750.00	
	101-4501-522030-	SUBURBAN BLDG OFFICALS CONFER	TRAVEL & TRAINING	$150.00	
	101-4501-522030-	ILLINOIS TOLLWAY	TRAVEL & TRAINING	$12.00	
	101-4501-522030-	ILLINOIS TOLLWAY	TRAVEL & TRAINING	$15.60	

VILLAGE OF ARLINGTON HEIGHTS

WARRANT REGISTER

CHECK DATE: 4/30/2026

CHECK #	ACCOUNT #	VENDOR NAME/#	DESCRIPTION	AMOUNT	TOTAL AMOUNT
					$34.12
316584	101-4501-530050-	AMAZON COM CAPITAL SERVICES	OFFICE SUPPLIES	$34.12	
					$17.73
316601	101-4501-522150-	CANON U.S.A. INC	OFFICE MACHINES & ACCESS	$17.73	
			DEPARTMENT 4501 TOTAL:	$4,203.45	

VILLAGE OF ARLINGTON HEIGHTS
WARRANT REGISTER
CHECK DATE: 4/30/2026

CHECK #	ACCOUNT #	VENDOR NAME/#	DESCRIPTION	AMOUNT	TOTAL AMOUNT
Department 7001	**HEALTH ADMIN**				
					$964.69
	101-7001-521650-	INTERFAX	NURSING FAX	$9.95	
	101-7001-522020-	DEPT OF FINANCIAL & PROF REGULATION	DUES	$153.38	
	101-7001-522030-	NORTHWEST COMMUNITY HEALTHCARE	TRAVEL & TRAINING	$100.00	
	101-7001-530050-	TRADER JOE'S	MISCELLANEOUS SUPPLIES	$191.04	
	101-7001-540530-	LYFT	EMERGENCY SERVICES	$9.00	
	101-7001-540530-	WALGREENS	EMERGENCY SERVICES	$125.00	
	101-7001-540530-	COMFORT INN & SUITES	EMERGENCY SERVICES	$125.00	
	101-7001-540530-	COMFORT INN & SUITES	EMERGENCY SERVICES	$99.80	
	101-7001-540530-	LYFT	TRANSPORTATION FOR RESIDENT	$12.59	
	101-7001-540530-	LYFT	TRANSPORTATION FOR RESIDENT	$86.23	
	101-7001-540530-	LYFT	TRANSPORTATION FOR RESIDENT	$26.34	
	101-7001-540530-	LYFT	TRANSPORTATION FOR RESIDENT	$26.36	
					$160.46
316584	101-7001-530050-	AMAZON COM CAPITAL SERVICES	OFFICE SUPPLIES	$74.99	
316584	101-7001-530050-	AMAZON COM CAPITAL SERVICES	OFFICE SUPPLIES	$85.47	
					$220.00
316616	101-7001-521100-	CORELOGIC SOLUTIONS LLC	SOFTWARE	$220.00	
					$297.34
316619	101-7001-521655-	CUSTOM DATA PROCESSING	SOFTWARE	$297.34	
					$109.49
316664	101-7001-533100-	MC KESSON MEDICAL SURGICAL	CLINIC SUPPLIES	$109.49	
					$22.66
316683	101-7001-530050-	ODP BUSINESS SOLUTIONS	OFFICE SUPPLIES	$22.66	

VILLAGE OF ARLINGTON HEIGHTS

WARRANT REGISTER

CHECK DATE: 4/30/2026

CHECK #	ACCOUNT #	VENDOR NAME/#	DESCRIPTION	AMOUNT	TOTAL AMOUNT
					$360.50
316706	101-7001-521020-	RAD ELEC INC	EQUIPMENT MAINTENANCE	$360.50	
					$112.04
316725	101-7001-530050-	TOWNSHIP HIGH SCHOOL DIST #214	OFFICE SUPPLIES	$112.04	
			DEPARTMENT 7001 TOTAL:	$2,247.18	

VILLAGE OF ARLINGTON HEIGHTS

WARRANT REGISTER

CHECK DATE: 4/30/2026

CHECK #	ACCOUNT #	VENDOR NAME/#	DESCRIPTION	AMOUNT	TOTAL AMOUNT
Department 7007	**HEALTH SENIOR SERVICES**				
					$1,903.03
	101-7007-521020-	AMAZON COM CAPITAL SERVICES	EQUIPMENT	$175.99	
	101-7007-521020-	AMAZON COM CAPITAL SERVICES	EQUIPMENT	$33.98	
	101-7007-522020-	ILLINOIS LIQUOR CONTROL COMMISSION	PROGRAM SUPPLIES	$26.00	
	101-7007-522030-	ILLINOIS LIQUOR CONTROL COMMISSION	TRAVEL & TRAINING	$12.95	
	101-7007-522030-	ILLINOIS BASSET C/O CERTUS FUSION	TRAVEL & TRAINING	$12.95	
	101-7007-530050-	AMAZON COM CAPITAL SERVICES	OFFICE SUPPLIES	$9.02	
	101-7007-530050-	AMAZON COM CAPITAL SERVICES	OFFICE SUPPLIES	$11.89	
	101-7007-530050-	AMAZON COM CAPITAL SERVICES	OFFICE SUPPLIES	$31.80	
	101-7007-530050-	AMAZON COM CAPITAL SERVICES	OFFICE SUPPLIES	$37.98	
	101-7007-530050-	AMAZON COM CAPITAL SERVICES	OFFICE SUPPLIES	$39.18	
	101-7007-530050-	AMAZON COM CAPITAL SERVICES	OFFICE SUPPLIES	$133.35	
	101-7007-530050-	AMAZON COM CAPITAL SERVICES	OFFICE SUPPLIES	$27.94	
	101-7007-531650-	SAMS CLUB	CAFE & PROGRAM SUPPLIES	$141.78	
	101-7007-531650-	AMAZON COM CAPITAL SERVICES	CAFE SUPPLIES	$52.57	
	101-7007-531650-	AMAZON COM CAPITAL SERVICES	CAFE SUPPLIES	$60.51	
	101-7007-531650-	AMAZON COM CAPITAL SERVICES	CAFE SUPPLIES	$61.04	
	101-7007-531650-	AMAZON COM CAPITAL SERVICES	CAFE SUPPLIES	$81.89	
	101-7007-531650-	AMAZON COM CAPITAL SERVICES	EQUIPMENT	$69.29	
	101-7007-531650-	AMAZON COM CAPITAL SERVICES	EQUIPMENT	$30.83	
	101-7007-540160-	EZ CATER	PROGRAM SUPPLIES	$106.73	
	101-7007-540160-	SAMS CLUB	PROGRAM SUPPLIES	$26.52	
	101-7007-540160-	AMAZON COM CAPITAL SERVICES	PROGRAM SUPPLIES	$26.91	
	101-7007-540160-	TORTORICE'S PIZZERIA	PROGRAM SUPPLIES	$216.50	

VILLAGE OF ARLINGTON HEIGHTS
WARRANT REGISTER
CHECK DATE: 4/30/2026

CHECK #	ACCOUNT #	VENDOR NAME/#	DESCRIPTION	AMOUNT	TOTAL AMOUNT
	101-7007-540160-	AMAZON COM CAPITAL SERVICES	PROGRAM SUPPLIES	$105.24	
	101-7007-540160-	AMAZON COM CAPITAL SERVICES	PROGRAM SUPPLIES	$7.99	
	101-7007-540160-	AMAZON COM CAPITAL SERVICES	PROGRAM SUPPLIES	$32.09	
	101-7007-540160-	CROWN TROPHY	PROGRAM SUPPLIES	$108.53	
	101-7007-540160-	AMAZON COM CAPITAL SERVICES	PROGRAM SUPPLIES	$221.58	
316596	101-7007-540160-	BILLINGTON, CHARLES	PROGRAM INSTRUCTIONAL FEE	$150.00	**$150.00**
316597	101-7007-540160-	BLUE LOTUS BUDDHIST TEMPLE	PROGRAM INSTRUCTIONAL FEE	$240.00	**$240.00**
316605	101-7007-540160-	CHINESE INTERCULTURAL, LLC	PROGRAM INSTRUCTIONAL FEE	$285.00	**$285.00**
316623	101-7007-540160-	DENISE LAURIN VISUAL ART	PROGRAM INSTRUCTIONAL FEE	$250.00	**$250.00**
316629	101-7007-540160-	ELIZABETH NIERMAN	PROGRAM SUPPLIES	$73.56	**$73.56**
316666	101-7007-540160-	MCIVER, TIFFANY	PROGRAM INSTRUCTIONAL FEE	$180.00	**$180.00**
			DEPARTMENT 7007 TOTAL:	$3,081.59	

VILLAGE OF ARLINGTON HEIGHTS
WARRANT REGISTER
CHECK DATE: 4/30/2026

CHECK #	ACCOUNT #	VENDOR NAME/#	DESCRIPTION	AMOUNT	TOTAL AMOUNT
Department 7101	**PUBLIC WORKS ADMIN**				
					$3,725.10
	101-7101-522020-	AMERICAN WATER WORKS ASSOC	DUES	$89.00	
	101-7101-522020-	AMERICAN WATER WORKS ASSOC	DUES	$89.00	
	101-7101-522020-	INTERNATIONAL SOCIETY OF ARBORICULTURE	DUES	$190.00	
	101-7101-522020-	INTERNATIONAL SOCIETY OF ARBORICULTURE	DUES	$190.00	
	101-7101-522020-	INTERNATIONAL SOCIETY OF ARBORICULTURE	DUES	$190.00	
	101-7101-522020-	INTERNATIONAL SOCIETY OF ARBORICULTURE	DUES	$465.00	
	101-7101-522030-	NORTHEASTERN IL PUBLIC SAFETY	TRAINING	$858.75	
	101-7101-522030-	APWA	TRAINING	$894.43	
	101-7101-522030-	HILTON HOTEL	TRAINING	$128.70	
	101-7101-531550-	METAL SUPERMARKETS	BUILDING SUPPLIES	$140.00	
	101-7101-531650-	MENARDS MT PROSPECT	EVENT SUPPLIES	$28.02	
	101-7101-531650-	SAMS CLUB	KITCHEN SUPPLIES	$44.04	
	101-7101-531650-	NORTHWEST DONUTS INC	MEETING SUPPLIES	$37.44	
	101-7101-531650-	SAMS CLUB	MEETING SUPPLIES	$39.80	
	401-7101-550200-	UNITED APPLIANCE PARTS	BUILDING MAINTENANCE SUPPLY	$340.92	
					$4,373.56
316577	101-7101-531450-	1ST AYD CORPORATION	JANITORIAL SUPPLIES	$4,373.56	
					$12,314.01
316578	401-7101-550200-	ABT ELECTRONICS	APPLIANCES	$1,258.00	
316578	401-7101-550200-	ABT ELECTRONICS	APPLIANCES	$11,056.01	
					$582.50
316580	101-7101-521020-	AFFILIATED CUSTOMER SERVICE INC	EQUIPMENT MAINTENANCE	$582.50	

VILLAGE OF ARLINGTON HEIGHTS

WARRANT REGISTER

CHECK DATE: 4/30/2026

CHECK #	ACCOUNT #	VENDOR NAME/#	DESCRIPTION	AMOUNT	TOTAL AMOUNT
316581	101-7101-521110-	AFTERMATH	SERVICE BUILDING MAINTENANCE	$300.00	**$300.00**
316583	401-7101-550150-	ALTA CONSTRUCTION EQUIPMENT OF IL	EQUIPMENT	$6,432.00	**$6,432.00**
316585	101-7101-531550-	ANDERSON LOCK	BUILDING MAINTENANCE SUPPLY	$145.28	**$145.28**
316586	101-7101-521020-	AQUALAB WATER TREATMENT INC	EQUIPMENT MAINTENANCE	$285.00	**$285.00**
316588	101-7101-522700-	AT&T	ACCT 84725535058159	$1,250.92	**$1,250.92**
316589	101-7101-522700-	AT&T	ACCT 84725331203952	$12,110.87	**$12,110.87**
316590	101-7101-522700-	AT&T	ACCT 8310015322822	$2,732.14	**$2,732.14**
316591	101-7101-522700-	AT&T	ACCT 8310010146347	$790.34	**$790.34**
316592	101-7101-522700-	AT&T	ACCT 8310010134261	$1,281.98	**$1,281.98**
316606	101-7101-521550-	CHRISTOPHER B BURKE LTD	PROFESSIONAL SERVICES	$2,727.19	**$14,481.55**
316606	401-7101-550300-	CHRISTOPHER B BURKE LTD	PROFESSIONAL SERVICES	$1,355.00	
316606	401-7101-550600-	CHRISTOPHER B BURKE LTD	PROFESSIONAL SERVICES	$10,399.36	
316607	426-7101-550250-	CIORBA GROUP, INC	PROFESSIONAL SERVICES	$18,961.50	**$18,961.50**
					$48,327.54

VILLAGE OF ARLINGTON HEIGHTS

WARRANT REGISTER

CHECK DATE: 4/30/2026

CHECK #	ACCOUNT #	VENDOR NAME/#	DESCRIPTION	AMOUNT	TOTAL AMOUNT
316610	401-7101-550300-	CIVILTECH ENGINEERING INC	PROFESSIONAL SERVICES	$18,677.21	
316610	401-7101-550300-	CIVILTECH ENGINEERING INC	PROFESSIONAL SERVICES	$29,650.33	
					$957.60
316614	101-7101-531400-	CONSERV FS INC	AGRICULTURAL SUPPLY	$957.60	
					$618.00
316615	101-7101-521020-	CONVERGINT TECHNOLOGIES LLC	EQUIPMENT MAINTENANCE	$618.00	
					$500.00
316617	101-7101-530350-	CRAFT, STEVE	REIMBURSEMENT	$500.00	
					$2,483.32
316633	101-7101-531450-	FERGUSON FACILITIES SUPPLY HP# 3400	JANITORIAL SUPPLIES	$187.32	
316633	101-7101-531450-	FERGUSON FACILITIES SUPPLY HP# 3400	JANITORIAL SUPPLIES	$2,296.00	
					$4,599.89
316636	401-7101-550200-	FLOOR COVERINGS INTL OF OAKBROOK	SERVICE BUILDING MAINTENANCE	$4,599.89	
					$7,736.08
316640	101-7101-521020-	GRAINGER W W INC	EQUIPMENT MAINTENANCE	$68.95	
316640	101-7101-531550-	GRAINGER W W INC	BUILDING MAINTENANCE SUPPLY	$49.98	
316640	101-7101-531550-	GRAINGER W W INC	BUILDING MAINTENANCE SUPPLY	$81.28	
316640	101-7101-531550-	GRAINGER W W INC	BUILDING MAINTENANCE SUPPLY	$103.20	
316640	101-7101-531550-	GRAINGER W W INC	BUILDING MAINTENANCE SUPPLY	$103.20	
316640	101-7101-531550-	GRAINGER W W INC	BUILDING MAINTENANCE SUPPLY	$110.51	
316640	101-7101-531550-	GRAINGER W W INC	BUILDING MAINTENANCE SUPPLY	$113.48	
316640	101-7101-531550-	GRAINGER W W INC	BUILDING MAINTENANCE SUPPLY	$142.28	
316640	101-7101-531550-	GRAINGER W W INC	BUILDING MAINTENANCE SUPPLY	$144.47	
316640	101-7101-531550-	GRAINGER W W INC	BUILDING MAINTENANCE SUPPLY	$208.75	
316640	101-7101-531550-	GRAINGER W W INC	BUILDING MAINTENANCE SUPPLY	$229.00	

VILLAGE OF ARLINGTON HEIGHTS
WARRANT REGISTER
CHECK DATE: 4/30/2026

CHECK #	ACCOUNT #	VENDOR NAME/#	DESCRIPTION	AMOUNT	TOTAL AMOUNT
316640	101-7101-531550-	GRAINGER W W INC	BUILDING MAINTENANCE SUPPLY	$301.83	
316640	101-7101-531550-	GRAINGER W W INC	BUILDING MAINTENANCE SUPPLY	$305.13	
316640	101-7101-531650-	GRAINGER W W INC	MISCELLANEOUS SUPPLIES	$4,452.30	
316640	101-7101-531850-	GRAINGER W W INC	SMALL TOOLS & EQUIPMENT	$361.98	
316640	401-7101-550200-	GRAINGER W W INC	BUILDING MAINTENANCE SUPPLY	$959.74	
					$1,088.27
316641	101-7101-522030-	HADYN CORTEZ	TRAVEL AND TRAINING	$1,088.27	
					$36,295.20
316642	235-7101-550250-	HAMMER CONSTRUCTION, LLC	CONSTRUCTION SERVICES	$36,295.20	
					$1,273.00
316644	101-7101-531800-	HIGH STAR TRAFFIC	STREET SIGN SUPPLIES	$1,273.00	
					$1,476.00
316646	101-7101-521110-	INTL EXTERMINATORS INC	SERVICE BUILDING MAINTENANCE	$60.00	
316646	101-7101-521110-	INTL EXTERMINATORS INC	SERVICE BUILDING MAINTENANCE	$60.00	
316646	101-7101-521110-	INTL EXTERMINATORS INC	SERVICE BUILDING MAINTENANCE	$65.00	
316646	101-7101-521110-	INTL EXTERMINATORS INC	SERVICE BUILDING MAINTENANCE	$88.00	
316646	101-7101-521110-	INTL EXTERMINATORS INC	SERVICE BUILDING MAINTENANCE	$88.00	
316646	101-7101-521110-	INTL EXTERMINATORS INC	SERVICE BUILDING MAINTENANCE	$104.00	
316646	101-7101-521110-	INTL EXTERMINATORS INC	SERVICE BUILDING MAINTENANCE	$120.00	
316646	101-7101-521110-	INTL EXTERMINATORS INC	SERVICE BUILDING MAINTENANCE	$891.00	
					$1,800.00
316649	101-7101-531400-	JCK CONTRACTORS	AGRICULTURAL SUPPLY	$900.00	
316649	101-7101-531400-	JCK CONTRACTORS	AGRICULTURAL SUPPLY	$900.00	
					$78.00
316651	101-7101-521020-	JOHNSON CONTROLS SECURITY SOLUTIONS LLC	EQUIPMENT MAINTENANCE	$78.00	

VILLAGE OF ARLINGTON HEIGHTS
WARRANT REGISTER
CHECK DATE: 4/30/2026

CHECK #	ACCOUNT #	VENDOR NAME/#	DESCRIPTION	AMOUNT	TOTAL AMOUNT
					$1,112.01
316652	101-7101-531550-	JOHNSTONE SUPPLY- THE HEARTLAND GROUP	BUILDING MAINTENANCE SUPPLY	$463.09	
316652	101-7101-531550-	JOHNSTONE SUPPLY- THE HEARTLAND GROUP	BUILDING MAINTENANCE SUPPLY	$648.92	
					$268.00
316654	101-7101-531550-	JUST FAUCETS	BUILDING MAINTENANCE SUPPLY	$118.00	
316654	101-7101-531550-	JUST FAUCETS	BUILDING MAINTENANCE SUPPLY	$150.00	
					$536.69
316660	101-7101-531400-	LOWES COMMERCIAL SERVICES	AGRICULTURAL SUPPLY	$9.46	
316660	101-7101-531400-	LOWES COMMERCIAL SERVICES	AGRICULTURAL SUPPLY	$53.46	
316660	101-7101-531400-	LOWES COMMERCIAL SERVICES	AGRICULTURAL SUPPLY	$133.03	
316660	101-7101-531550-	LOWES COMMERCIAL SERVICES	BUILDING MAINTENANCE SUPPLY	$37.96	
316660	101-7101-531550-	LOWES COMMERCIAL SERVICES	BUILDING MAINTENANCE SUPPLY	$82.17	
316660	101-7101-531550-	LOWES COMMERCIAL SERVICES	BUILDING MAINTENANCE SUPPLY	$92.90	
316660	515-7101-533050-	LOWES COMMERCIAL SERVICES	EVENT SUPPLIES	$127.71	
					$99.27
316663	101-7101-531400-	MATTS ACE HARDWARE	AGRICULTURAL SUPPLY	$30.33	
316663	101-7101-531550-	MATTS ACE HARDWARE	BUILDING MAINTENANCE SUPPLY	$0.99	
316663	101-7101-531550-	MATTS ACE HARDWARE	BUILDING MAINTENANCE SUPPLY	$35.96	
316663	101-7101-531850-	MATTS ACE HARDWARE	SMALL TOOLS & EQUIPMENT	$31.99	
					$62.99
316667	101-7101-531550-	MENARDS-LONG GROVE	BUILDING MAINTENANCE SUPPLY	$62.99	
					$1,611.80
316671	101-7101-531400-	MICHIGAN WEST SHORE	AGRICULTURAL SUPPLY	$618.70	
316671	101-7101-531400-	MICHIGAN WEST SHORE	AGRICULTURAL SUPPLY	$993.10	
					$365.90

VILLAGE OF ARLINGTON HEIGHTS

WARRANT REGISTER

CHECK DATE: 4/30/2026

CHECK #	ACCOUNT #	VENDOR NAME/#	DESCRIPTION	AMOUNT	TOTAL AMOUNT
316673	101-7101-531700-	MULTIPLE CONCRETE ACCESSORIES	TRAFFIC SIGNAL SUPPLIES	$365.90	
					$2,852.82
316682	101-7101-531750-	NORTHWEST ELECTRICAL SUPPLY CO	STREET LIGHT SUPPLIES	$527.15	
316682	235-7101-550250-	NORTHWEST ELECTRICAL SUPPLY CO	BUILDING MAINTENANCE SUPPLY	$119.71	
316682	235-7101-550250-	NORTHWEST ELECTRICAL SUPPLY CO	BUILDING MAINTENANCE SUPPLY	$299.94	
316682	235-7101-550250-	NORTHWEST ELECTRICAL SUPPLY CO	BUILDING MAINTENANCE SUPPLY	$1,322.22	
316682	235-7101-550250-	NORTHWEST ELECTRICAL SUPPLY CO	BUILDING MAINTENANCE SUPPLY	$36.52	
316682	235-7101-550250-	NORTHWEST ELECTRICAL SUPPLY CO	BUILDING MAINTENANCE SUPPLY	$522.28	
316682	515-7101-533050-	NORTHWEST ELECTRICAL SUPPLY CO	ARLINGTON ALFRESCO	$25.00	
					$31,664.75
316684	101-7101-530390-	OFFEN PETROLEUM LLC	FUEL	$31,664.75	
					$5,384.37
316697	401-7101-550300-	PERALTE-CLARK, LLC	PROFESSIONAL SERVICES	$5,384.37	
					$102.95
316699	101-7101-531650-	PETTY CASH	KITCHEN SUPPLIES	$41.98	
316699	101-7101-531650-	PETTY CASH	KITCHEN SUPPLIES	$60.97	
					$1,749.85
316703	101-7101-531900-	PRIME, TACK & SEAL CO.	STREET SUPPLIES	$775.25	
316703	101-7101-531900-	PRIME, TACK & SEAL CO.	STREET SUPPLIES	$974.60	
					$2,109.81
316709	101-7101-521110-	ROSCOE COMPANY	SERVICE BUILDING MAINTENANCE	$68.00	
316709	101-7101-521110-	ROSCOE COMPANY	SERVICE BUILDING MAINTENANCE	$93.54	
316709	101-7101-521110-	ROSCOE COMPANY	SERVICE BUILDING MAINTENANCE	$98.93	

VILLAGE OF ARLINGTON HEIGHTS
WARRANT REGISTER
CHECK DATE: 4/30/2026

CHECK #	ACCOUNT #	VENDOR NAME/#	DESCRIPTION	AMOUNT	TOTAL AMOUNT
316709	101-7101-521110-	ROSCOE COMPANY	SERVICE BUILDING MAINTENANCE	$102.62	
316709	101-7101-521110-	ROSCOE COMPANY	SERVICE BUILDING MAINTENANCE	$105.60	
316709	101-7101-521110-	ROSCOE COMPANY	SERVICE BUILDING MAINTENANCE	$146.28	
316709	101-7101-521110-	ROSCOE COMPANY	SERVICE BUILDING MAINTENANCE	$169.34	
316709	101-7101-521110-	ROSCOE COMPANY	SERVICE BUILDING MAINTENANCE	$219.30	
316709	101-7101-521110-	ROSCOE COMPANY	SERVICE BUILDING MAINTENANCE	$219.69	
316709	101-7101-521110-	ROSCOE COMPANY	SERVICE BUILDING MAINTENANCE	$253.44	
316709	101-7101-521110-	ROSCOE COMPANY	SERVICE BUILDING MAINTENANCE	$271.61	
316709	101-7101-521110-	ROSCOE COMPANY	SERVICE BUILDING MAINTENANCE	$361.46	
					$81.81
316710	101-7101-531850-	ROUTE 12 RENTAL CO INC	SMALL TOOLS & EQUIPMENT	$81.81	
					$110.00
316713	101-7101-521650-	SIDWELL CO	SERVICE BUILDING MAINTENANCE	$110.00	
					($154.09)
316719	101-7101-531550-	STEINER ELECTRIC COMPANY	BUILDING MAINTENANCE SUPPLY	($109.60)	
316719	101-7101-531550-	STEINER ELECTRIC COMPANY	BUILDING MAINTENANCE SUPPLY	$103.96	
316719	101-7101-531550-	STEINER ELECTRIC COMPANY	BUILDING MAINTENANCE SUPPLY	$109.60	
316719	101-7101-531550-	STEINER ELECTRIC COMPANY	BUILDING MAINTENANCE SUPPLY	$223.35	
316719	101-7101-531550-	STEINER ELECTRIC COMPANY	BUILDING MAINTENANCE SUPPLY	$324.60	
316719	101-7101-531750-	STEINER ELECTRIC COMPANY	STREET LIGHT SUPPLIES	($2,888.00)	
316719	101-7101-531750-	STEINER ELECTRIC COMPANY	STREET LIGHT SUPPLIES	$2,082.00	
					$219.99
316721	101-7101-530350-	STEVEN MURRAY	REIMBURSEMENT	$219.99	
					$3,705.00
316726	515-7101-533050-	TRAFFIC AND PARKING CONTROL CO., LLC	ARLINGTON ALFRESCO	$3,705.00	

VILLAGE OF ARLINGTON HEIGHTS
WARRANT REGISTER
CHECK DATE: 4/30/2026

CHECK #	ACCOUNT #	VENDOR NAME/#	DESCRIPTION	AMOUNT	TOTAL AMOUNT
					$488.00
316727	101-7101-521010-	TRAFFIC CONTROL CORP	TRAFFIC SIGNAL MAINTENANCE	$488.00	
					$836.50
316729	101-7101-531450-	ULINE INC	JANITORIAL SUPPLIES	$587.00	
316729	101-7101-531650-	ULINE INC	MISCELLANEOUS SUPPLIES	$249.50	
					$587.25
316737	101-7101-521110-	WAUKEGAN ROOFING CO INC	SERVICE BUILDING MAINTENANCE	$587.25	
					$375.00
316738	101-7101-522700-	WILSON CONSULTING	PHONE SERVICES	$375.00	
					$2,313.76
316739	101-7101-531450-	ZEP MANUFACTURING CO	JANITORIAL SUPPLIES	$2,313.76	
					$390.00
316741	101-7101-520050-	ZIMMERMAN, RYAN	PROFESSIONAL SERVICES	$390.00	
					$1,179.80
316742	101-7101-530350-	ZORO TOOLS INC	CLOTHING	$109.92	
316742	101-7101-531450-	ZORO TOOLS INC	JANITORIAL SUPPLIES	$242.82	
316742	101-7101-531650-	ZORO TOOLS INC	MISCELLANEOUS SUPPLIES	$827.06	
					$494.08
802586	101-7101-522700-	AT&T	ACCT 84725961248940	$60.16	
802586	101-7101-522700-	AT&T	ACCT 84739893361501	$61.66	
802586	101-7101-522700-	AT&T	ACCT 84739208661733	$62.52	
802586	101-7101-522700-	AT&T	ACCT 84739893901330	$66.10	
802586	101-7101-522700-	AT&T	ACCT 84743978686650	$120.32	
802586	101-7101-522700-	AT&T	ACCT 84725334382001	$123.32	
					$2,019.63
802587	101-7101-521500-	COMMONWEALTH EDISON	ACCT 3895240100	$19.46	

VILLAGE OF ARLINGTON HEIGHTS

WARRANT REGISTER

CHECK DATE: 4/30/2026

CHECK #	ACCOUNT #	VENDOR NAME/#	DESCRIPTION	AMOUNT	TOTAL AMOUNT
		COMPANY			
802587	101-7101-521500-	COMMONWEALTH EDISON COMPANY	ACCT 1483465000	$133.57	
802587	101-7101-521500-	COMMONWEALTH EDISON COMPANY	ACCT 2318364000	$138.39	
802587	101-7101-521500-	COMMONWEALTH EDISON COMPANY	ACCT 4858204000	$268.93	
802587	101-7101-521500-	COMMONWEALTH EDISON COMPANY	ACCT 7397572000	$274.31	
802587	101-7101-521500-	COMMONWEALTH EDISON COMPANY	ACCT 8017024000	$1,184.97	
					$1,235.87
802589	101-7101-521500-	NICOR	ACCT 58401600000	$1,235.87	
			DEPARTMENT 7101 TOTAL:	$248,803.46	

VILLAGE OF ARLINGTON HEIGHTS
WARRANT REGISTER
CHECK DATE: 4/30/2026

CHECK #	ACCOUNT #	VENDOR NAME/#	DESCRIPTION	AMOUNT	TOTAL AMOUNT
Department 7201	**WATER AND SEWER ADMIN**				
					$6,755.97
	505-7201-522020-	AMERICAN WATER WORKS ASSOC	DUES	$89.00	
	505-7201-522020-	AMERICAN WATER WORKS ASSOC	DUES	$89.00	
	505-7201-522020-	AMERICAN WATER WORKS ASSOC	DUES	$89.00	
	505-7201-522020-	AMERICAN WATER WORKS ASSOC	DUES	$89.00	
	505-7201-522020-	AMERICAN WATER WORKS ASSOC	DUES	$273.00	
	505-7201-522030-	AMERICAN WATER WORKS ASSOC	DUES	$273.00	
	505-7201-522030-	AMERICAN WATER WORKS ASSOC	DUES	$273.00	
	505-7201-522030-	HOLIDAY INN	TRAINING	$201.09	
	505-7201-522030-	ILLINOIS SECTION AMERICAN WATER WORKS ASSOCIATION	TRAINING	$125.00	
	505-7201-522030-	UNITED AIRLINES	TRAINING	$184.40	
	505-7201-522030-	UNITED AIRLINES	TRAINING	$257.20	
	505-7201-522030-	NORTHEASTERN IL PUBLIC SAFETY	TRAINING	$1,550.00	
	505-7201-522030-	AMERICAN WATER WORKS ASSOC	TRAINING	$1,050.00	
	505-7201-522030-	UNITED AIRLINES	TRAINING	$456.23	
	505-7201-522030-	UNITED AIRLINES	TRAINING	$456.23	
	505-7201-522030-	UNITED AIRLINES	TRAINING	$456.23	
	505-7201-522030-	UNITED AIRLINES	TRAINING	$456.23	
	505-7201-531850-	BUNKER GEAR SPECIALISTS	WATER SYSTEM TOOLS	$388.36	
					$20,000.00
316583	505-7201-550150-	ALTA CONSTRUCTION EQUIPMENT OF IL	EQUIPMENT	$20,000.00	
					$6,895.00
316602	505-7201-550150-	CDS OFFICE TECHNOLOGIES	OFFICE EQUIPMENT	$6,895.00	
					$5,066.25

VILLAGE OF ARLINGTON HEIGHTS

WARRANT REGISTER

CHECK DATE: 4/30/2026

CHECK #	ACCOUNT #	VENDOR NAME/#	DESCRIPTION	AMOUNT	TOTAL AMOUNT
316606	505-7201-521250-	CHRISTOPHER B BURKE LTD	SEWER SUPPLIES	$2,166.25	
316606	505-7201-521250-	CHRISTOPHER B BURKE LTD	SEWER SUPPLIES	$1,250.00	
316606	505-7201-521250-	CHRISTOPHER B BURKE LTD	SEWER SUPPLIES	$1,650.00	
					$184.78
316611	505-7201-521500-	COMMONWEALTH EDISON COMPANY	ACCT 45549270000626	$184.78	
					$45.24
316612	505-7201-521500-	COMMONWEALTH EDISON COMPANY	ACCT 3582102111	$45.24	
					$11,835.25
316625	505-7201-521500-	DIRECT ENERGY BUSINESS MARKETING LLC	ACCT 1806641	$11,835.25	
					$1,424.82
316626	505-7201-521500-	DIRECT ENERGY BUSINESS MARKETING LLC	ACCT 1806639	$1,424.82	
					$555.59
316627	505-7201-521500-	DIRECT ENERGY BUSINESS MARKETING LLC	ACCT 1806640	$555.59	
					$1,589.04
316637	505-7201-531010-	FOREMAN JOSEPH D AND CO	WATER SYSTEM SUPPLIES	$1,589.04	
					$5,527.43
316640	505-7201-530300-	GRAINGER W W INC	DATA SYSTEM SUPPLIES	$260.97	
316640	505-7201-530300-	GRAINGER W W INC	DATA SYSTEM SUPPLIES	$521.94	
316640	505-7201-531550-	GRAINGER W W INC	BUILDING MAINTENANCE SUPPLY	$252.72	
316640	505-7201-550150-	GRAINGER W W INC	MISCELLANEOUS SUPPLIES	$4,491.80	
					$131.95
316643	505-7201-530350-	HASSENAUER, MICHAEL	REIMBURSEMENT	$131.95	
					$204.00
316647	505-7201-522030-	BRANDING TOUCHPOINT / IPROMOTE U	CLOTHING & APPAREL	$204.00	

VILLAGE OF ARLINGTON HEIGHTS
WARRANT REGISTER
CHECK DATE: 4/30/2026

CHECK #	ACCOUNT #	VENDOR NAME/#	DESCRIPTION	AMOUNT	TOTAL AMOUNT
					$500.00
316653	505-7201-530350-	JOSHUA ENGELKING	REIMBURSEMENT	$500.00	
					$520.26
316660	505-7201-531550-	LOWES COMMERCIAL SERVICES	BUILDING MAINTENANCE SUPPLY	$41.16	
316660	505-7201-531550-	LOWES COMMERCIAL SERVICES	BUILDING MAINTENANCE SUPPLY	$64.85	
316660	505-7201-531550-	LOWES COMMERCIAL SERVICES	BUILDING MAINTENANCE SUPPLY	$98.68	
316660	505-7201-531550-	LOWES COMMERCIAL SERVICES	BUILDING MAINTENANCE SUPPLY	$127.80	
316660	505-7201-531850-	LOWES COMMERCIAL SERVICES	SMALL TOOLS & EQUIPMENT	$12.08	
316660	505-7201-531850-	LOWES COMMERCIAL SERVICES	SMALL TOOLS & EQUIPMENT	$175.69	
					$5.98
316663	505-7201-531600-	MATTS ACE HARDWARE	CHEMICALS	$5.98	
					$1,297.60
316668	505-7201-531070-	MENONI & MECOGNI	SEWER COLLECTION SUPPLY	$1,297.60	
					$12,917.66
316672	505-7201-531010-	MID AMERICAN WATER OF WAUCONDA, INC.	WATER SYSTEM SUPPLIES	$808.80	
316672	505-7201-531010-	MID AMERICAN WATER OF WAUCONDA, INC.	WATER SYSTEM SUPPLIES	$1,903.21	
316672	505-7201-531010-	MID AMERICAN WATER OF WAUCONDA, INC.	WATER SYSTEM SUPPLIES	$1,920.00	
316672	505-7201-531010-	MID AMERICAN WATER OF WAUCONDA, INC.	WATER SYSTEM SUPPLIES	$2,486.10	
316672	505-7201-531010-	MID AMERICAN WATER OF WAUCONDA, INC.	WATER SYSTEM SUPPLIES	$2,817.65	
316672	505-7201-531010-	MID AMERICAN WATER OF WAUCONDA, INC.	WATER SYSTEM SUPPLIES	$2,824.80	
316672	505-7201-531010-	MID AMERICAN WATER OF WAUCONDA, INC.	WATER VALVE & HYDRANT REPLACEMENT	$77.10	
316672	505-7201-531850-	MID AMERICAN WATER OF WAUCONDA, INC.	SMALL TOOLS & EQUIPMENT	$80.00	
					$198.00

VILLAGE OF ARLINGTON HEIGHTS
WARRANT REGISTER
CHECK DATE: 4/30/2026

CHECK #	ACCOUNT #	VENDOR NAME/#	DESCRIPTION	AMOUNT	TOTAL AMOUNT
316675	505-7201-531070-	NEENAH FOUNDRY COMPANY	SEWER SUPPLIES	$198.00	
					$499.99
316676	505-7201-530350-	NORBERT MROCZKOWSKI	REIMBURSEMENT	$499.99	
					$250.00
316696	505-7201-530350-	PAUL LAMPA	REIMBURSEMENT	$250.00	
					$1,335.64
316701	505-7201-521250-	PIZZO & ASSOCIATES, LTD	SEWER SUPPLIES	$373.13	
316701	505-7201-521250-	PIZZO & ASSOCIATES, LTD	SEWER SUPPLIES	$962.51	
					$318.00
316710	505-7201-521360-	ROUTE 12 RENTAL CO INC	EQUIPMENT RENTAL	$318.00	
					$72.73
316716	505-7201-522700-	SOUND INCORPORATED	PHONE SERVICE	$72.73	
					$225.70
316719	505-7201-531550-	STEINER ELECTRIC COMPANY	BUILDING MAINTENANCE SUPPLY	$225.70	
					$2,887.24
316740	505-7201-531010-	ZIEBELL WATER SERVICE PRODUCTS	WATER SYSTEM SUPPLIES	$2,887.24	
					$390.00
316741	505-7201-520050-	ZIMMERMAN, RYAN	PROFESSIONAL SERVICES	$390.00	
					$182.48
802586	505-7201-522700-	AT&T	ACCT 84743746858567	$60.16	
802586	505-7201-522700-	AT&T	ACCT 84743746842777	$60.16	
802586	505-7201-522700-	AT&T	ACCT 84725301748135	$62.16	
					$3,627.65
802587	505-7201-521500-	COMMONWEALTH EDISON COMPANY	ACCT 0766943000	$53.67	
802587	505-7201-521500-	COMMONWEALTH EDISON COMPANY	ACCT 6652766000	$63.10	

VILLAGE OF ARLINGTON HEIGHTS

WARRANT REGISTER

CHECK DATE: 4/30/2026

CHECK #	ACCOUNT #	VENDOR NAME/#	DESCRIPTION	AMOUNT	TOTAL AMOUNT
802587	505-7201-521500-	COMMONWEALTH EDISON COMPANY	ACCT 2471022222	$116.20	
802587	505-7201-521500-	COMMONWEALTH EDISON COMPANY	ACCT 0085022222	$139.24	
802587	505-7201-521500-	COMMONWEALTH EDISON COMPANY	ACCT 4873432222	$167.93	
802587	505-7201-521500-	COMMONWEALTH EDISON COMPANY	ACCT 8275568111	$168.10	
802587	505-7201-521500-	COMMONWEALTH EDISON COMPANY	ACCT 6000042222	$226.12	
802587	505-7201-521500-	COMMONWEALTH EDISON COMPANY	ACCT 1624693000	$370.99	
802587	505-7201-521500-	COMMONWEALTH EDISON COMPANY	ACCT 7839129000	$453.82	
802587	505-7201-521500-	COMMONWEALTH EDISON COMPANY	ACCT 8556642222	$1,868.48	
					$1,761.29
802588	505-7201-521500-	CONSTELLATION NEW ENERGY INC	ACCT 1050216	$769.10	
802588	505-7201-521500-	CONSTELLATION NEW ENERGY INC	ACCT 1050214	$992.19	
					$413.54
802589	505-7201-521500-	NICOR	ACCT 58544400003	$179.99	
802589	505-7201-521500-	NICOR	ACCT 90920700003	$233.55	
			DEPARTMENT 7201 TOTAL:	$87,619.08	

VILLAGE OF ARLINGTON HEIGHTS

WARRANT REGISTER

CHECK DATE: 4/30/2026

CHECK #	ACCOUNT #	VENDOR NAME/#	DESCRIPTION	AMOUNT	TOTAL AMOUNT
Department 7301	**PARKING ADMIN**				
					$3,425.12
316732	235-7301-521400-	UNION PACIFIC RAILROAD COMPANY	2026 1ST QUARTER LOT P	$3,425.12	
					$104.08
802587	235-7301-521500-	COMMONWEALTH EDISON COMPANY	ACCT 9730174000	$39.08	
802587	235-7301-521500-	COMMONWEALTH EDISON COMPANY	ACCT 8899825000	$65.00	
			DEPARTMENT 7301 TOTAL:	$3,529.20	

VILLAGE OF ARLINGTON HEIGHTS

WARRANT REGISTER

CHECK DATE: 4/30/2026

CHECK #	ACCOUNT #	VENDOR NAME/#	DESCRIPTION	AMOUNT	TOTAL AMOUNT
Department 7302	**PARKING VAIL ST. GARAGE OPER**				
802586	235-7302-521500-	AT&T	ACCT 84725309782425	$246.65	**$246.65**
802588	235-7302-521500-	CONSTELLATION NEW ENERGY INC	ACCT 1050215	$2,158.71	**$2,158.71**
			DEPARTMENT 7302 TOTAL:	$2,405.36	

VILLAGE OF ARLINGTON HEIGHTS

WARRANT REGISTER

CHECK DATE: 4/30/2026

CHECK #	ACCOUNT #	VENDOR NAME/#	DESCRIPTION	AMOUNT	TOTAL AMOUNT
Department 7303	**PARKING NORTH GARAGE OPER**				
					$245.54
802586	235-7303-521500-	AT&T	ACCT 84763200281737	$245.54	
			DEPARTMENT 7303 TOTAL:	$245.54	

VILLAGE OF ARLINGTON HEIGHTS

WARRANT REGISTER

CHECK DATE: 4/30/2026

CHECK #	ACCOUNT #	VENDOR NAME/#	DESCRIPTION	AMOUNT	TOTAL AMOUNT
Department 7304	**PARKING EVERGREEN ST GAR OPER**				
316580	235-7304-521020-	AFFILIATED CUSTOMER SERVICE INC	EQUIPMENT MAINTENANCE	$1,616.75	**$1,616.75**
802588	235-7304-521500-	CONSTELLATION NEW ENERGY INC	ACCT 1050222	$1,607.07	**$1,607.07**
			DEPARTMENT 7304 TOTAL:	$3,223.82	

VILLAGE OF ARLINGTON HEIGHTS

WARRANT REGISTER

CHECK DATE: 4/30/2026

CHECK #	ACCOUNT #	VENDOR NAME/#	DESCRIPTION	AMOUNT	TOTAL AMOUNT
Department 7401	**SOLID WASTE DISPSL SWANCCADMIN**				
					$153,380.00
902831	511-7401-521540-	SOLID WASTE AGENCY	MAY 2026 TIPPING FEES	$908.00	
902831	511-7401-521540-	SOLID WASTE AGENCY	MAY 2026 TIPPING FEES	$152,472.00	
			DEPARTMENT 7401 TOTAL:	$153,380.00	

VILLAGE OF ARLINGTON HEIGHTS

WARRANT REGISTER

CHECK DATE: 4/30/2026

CHECK #	ACCOUNT #	VENDOR NAME/#	DESCRIPTION	AMOUNT	TOTAL AMOUNT
Department 7501	**MUNICIPAL FLEET SVCS ADMIN**				
					$424.92
	621-7501-522020-	ASE BLUE SEAL RECOGNITION PROGAM	DUES	$65.00	
	621-7501-522030-	PASS TRAINING & COMPLIANCE	TRAINING	$300.00	
	621-7501-531510-	MONTANA JACKS	VEH MAINTENANCE SUPPLY	$59.92	
					$2,828.60
316587	621-7501-521070-	ARLINGTON HTS FORD	VEH MAINTENANCE SUPPLY	$1,593.04	
316587	621-7501-531510-	ARLINGTON HTS FORD	VEH MAINTENANCE SUPPLY	$45.04	
316587	621-7501-531510-	ARLINGTON HTS FORD	VEH MAINTENANCE SUPPLY	$161.63	
316587	621-7501-531510-	ARLINGTON HTS FORD	VEH MAINTENANCE SUPPLY	$289.69	
316587	621-7501-531510-	ARLINGTON HTS FORD	VEH MAINTENANCE SUPPLY	$739.20	
					$4,159.22
316599	621-7501-531510-	BROWN EQUIPMENT COMPANY	VEH MAINTENANCE SUPPLY	$660.43	
316599	621-7501-531510-	BROWN EQUIPMENT COMPANY	VEH MAINTENANCE SUPPLY	$3,498.79	
					$360.17
316600	621-7501-531510-	BUMPER TO BUMPER	VEH MAINTENANCE SUPPLY	$15.59	
316600	621-7501-531510-	BUMPER TO BUMPER	VEH MAINTENANCE SUPPLY	$26.46	
316600	621-7501-531510-	BUMPER TO BUMPER	VEH MAINTENANCE SUPPLY	$26.75	
316600	621-7501-531510-	BUMPER TO BUMPER	VEH MAINTENANCE SUPPLY	$37.73	
316600	621-7501-531510-	BUMPER TO BUMPER	VEH MAINTENANCE SUPPLY	$253.64	
					$94.74
316604	621-7501-531510-	CHICAGO PARTS & SOUND ENTERPRISES	VEH MAINTENANCE SUPPLY	$94.74	
					$97.96
316608	621-7501-521360-	CITY WELDING SALES & SERVICE	EQUIPMENT RENTAL	$97.96	
					$71.18

VILLAGE OF ARLINGTON HEIGHTS
WARRANT REGISTER
CHECK DATE: 4/30/2026

CHECK #	ACCOUNT #	VENDOR NAME/#	DESCRIPTION	AMOUNT	TOTAL AMOUNT
316628	621-7501-521070-	EJ EQUIPMENT INCORPORATED	VEH EQUIPMENT MAINTENANCE	$71.18	
					$4,187.30
316632	621-7501-521070-	EUCLID GAS & CAR WASH	VEH EQUIPMENT MAINTENANCE	$895.60	
316632	621-7501-521070-	EUCLID GAS & CAR WASH	VEH EQUIPMENT MAINTENANCE	$1,419.00	
316632	621-7501-521070-	EUCLID GAS & CAR WASH	VEH EQUIPMENT MAINTENANCE	$1,872.70	
					$184.72
316640	621-7501-531510-	GRAINGER W W INC	VEH MAINTENANCE SUPPLY	$39.12	
316640	621-7501-531510-	GRAINGER W W INC	VEH MAINTENANCE SUPPLY	$43.67	
316640	621-7501-531510-	GRAINGER W W INC	VEH MAINTENANCE SUPPLY	$101.93	
					$3,645.14
316656	621-7501-531510-	LEAHY-WOLF COMPANY	VEH MAINTENANCE SUPPLY	$1,295.00	
316656	621-7501-531510-	LEAHY-WOLF COMPANY	VEH MAINTENANCE SUPPLY	$2,350.14	
					$178.67
316661	621-7501-531510-	MACQUEEN EMERGENCY GROUP	VEH MAINTENANCE SUPPLY	$178.67	
					$39.99
316663	621-7501-531510-	MATTS ACE HARDWARE	VEH MAINTENANCE SUPPLY	$39.99	
					$1,068.66
316665	621-7501-531510-	MC MASTER CARR SUPPLY CO	VEH MAINTENANCE SUPPLY	$29.14	
316665	621-7501-531510-	MC MASTER CARR SUPPLY CO	VEH MAINTENANCE SUPPLY	$57.97	
316665	621-7501-531510-	MC MASTER CARR SUPPLY CO	VEH MAINTENANCE SUPPLY	$105.84	
316665	621-7501-531510-	MC MASTER CARR SUPPLY CO	VEH MAINTENANCE SUPPLY	$374.40	
316665	621-7501-531510-	MC MASTER CARR SUPPLY CO	VEH MAINTENANCE SUPPLY	$501.31	
					$2,035.62
316674	621-7501-531510-	NAPA AUTO PARTS	VEH MAINTENANCE SUPPLY	$27.84	
316674	621-7501-531510-	NAPA AUTO PARTS	VEH MAINTENANCE SUPPLY	$30.54	
316674	621-7501-531510-	NAPA AUTO PARTS	VEH MAINTENANCE SUPPLY	$40.09	

VILLAGE OF ARLINGTON HEIGHTS
WARRANT REGISTER
CHECK DATE: 4/30/2026

CHECK #	ACCOUNT #	VENDOR NAME/#	DESCRIPTION	AMOUNT	TOTAL AMOUNT
316674	621-7501-531510-	NAPA AUTO PARTS	VEH MAINTENANCE SUPPLY	$41.99	
316674	621-7501-531510-	NAPA AUTO PARTS	VEH MAINTENANCE SUPPLY	$44.23	
316674	621-7501-531510-	NAPA AUTO PARTS	VEH MAINTENANCE SUPPLY	$44.37	
316674	621-7501-531510-	NAPA AUTO PARTS	VEH MAINTENANCE SUPPLY	$52.32	
316674	621-7501-531510-	NAPA AUTO PARTS	VEH MAINTENANCE SUPPLY	$95.06	
316674	621-7501-531510-	NAPA AUTO PARTS	VEH MAINTENANCE SUPPLY	$172.23	
316674	621-7501-531510-	NAPA AUTO PARTS	VEH MAINTENANCE SUPPLY	$174.00	
316674	621-7501-531510-	NAPA AUTO PARTS	VEH MAINTENANCE SUPPLY	$219.38	
316674	621-7501-531510-	NAPA AUTO PARTS	VEH MAINTENANCE SUPPLY	$239.60	
316674	621-7501-531510-	NAPA AUTO PARTS	VEH MAINTENANCE SUPPLY	$282.73	
316674	621-7501-531510-	NAPA AUTO PARTS	VEH MAINTENANCE SUPPLY	$571.24	
					$1,304.94
316695	621-7501-531510-	PATLIN INC	VEH MAINTENANCE SUPPLY	$406.87	
316695	621-7501-531510-	PATLIN INC	VEH MAINTENANCE SUPPLY	$898.07	
					$729.00
316705	621-7501-521070-	RACEWAY CARWASH	VEH EQUIPMENT MAINTENANCE	$729.00	
					$116.08
316711	621-7501-531650-	RUBBER INC	MISCELLANEOUS SUPPLIES	$116.08	
					$679.80
316715	621-7501-521020-	SLE TECHNOLOGIES, INC	EQUIPMENT MAINTENANCE	$679.80	
					$137.58
316718	621-7501-531510-	STANDARD EQUIPMENT CO	VEH MAINTENANCE SUPPLY	$137.58	
					$270.60
316723	621-7501-531650-	TERRACE SUPPLY CO	MISCELLANEOUS SUPPLIES	$45.20	
316723	621-7501-531650-	TERRACE SUPPLY CO	MISCELLANEOUS SUPPLIES	$225.40	
					$9,182.50

VILLAGE OF ARLINGTON HEIGHTS

WARRANT REGISTER

CHECK DATE: 4/30/2026

CHECK #	ACCOUNT #	VENDOR NAME/#	DESCRIPTION	AMOUNT	TOTAL AMOUNT
316730	621-7501-521070-	ULTRA STROBE COMMUNICATIONS INC	EQUIPMENT MAINTENANCE	$157.50	
316730	621-7501-521070-	ULTRA STROBE COMMUNICATIONS INC	EQUIPMENT MAINTENANCE	$3,950.00	
316730	621-7501-521070-	ULTRA STROBE COMMUNICATIONS INC	EQUIPMENT MAINTENANCE	$4,775.00	
316730	621-7501-531510-	ULTRA STROBE COMMUNICATIONS INC	VEH MAINTENANCE SUPPLY	$300.00	
					$240.00
316731	621-7501-530350-	UNIFIRST CORPORATION	CLOTHING	$120.00	
316731	621-7501-530350-	UNIFIRST CORPORATION	CLOTHING	$120.00	
					$188.86
316733	621-7501-531510-	US AUTOFORCE	VEH MAINTENANCE SUPPLY	$188.86	
					$295.97
316742	621-7501-531510-	ZORO TOOLS INC	VEH MAINTENANCE SUPPLY	$93.60	
316742	621-7501-531510-	ZORO TOOLS INC	VEH MAINTENANCE SUPPLY	$94.47	
316742	621-7501-531510-	ZORO TOOLS INC	VEH MAINTENANCE SUPPLY	$107.90	
			DEPARTMENT 7501 TOTAL:	$32,522.22	

VILLAGE OF ARLINGTON HEIGHTS

WARRANT REGISTER

CHECK DATE: 4/30/2026

CHECK #	ACCOUNT #	VENDOR NAME/#	DESCRIPTION	AMOUNT	TOTAL AMOUNT
Department 9001	**CAPITAL ADMIN**				
					$9,957.00
316594	505-9001-550250-	BAXTER & WOODMAN	PROFESSIONAL SERVICES	$9,957.00	
					$7,768.62
316672	505-9001-550250-	MID AMERICAN WATER OF WAUCONDA, INC.	WATER VALVE & HYDRANT REPLACEMENT	$870.00	
316672	505-9001-550250-	MID AMERICAN WATER OF WAUCONDA, INC.	WATER VALVE & HYDRANT REPLACEMENT	$2,373.04	
316672	505-9001-550250-	MID AMERICAN WATER OF WAUCONDA, INC.	WATER VALVE & HYDRANT REPLACEMENT	$950.63	
316672	505-9001-550250-	MID AMERICAN WATER OF WAUCONDA, INC.	WATER VALVE & HYDRANT REPLACEMENT	$1,088.55	
316672	505-9001-550250-	MID AMERICAN WATER OF WAUCONDA, INC.	WATER VALVE & HYDRANT REPLACEMENT	$2,486.40	
			DEPARTMENT 9001 TOTAL:	$17,725.62	

VILLAGE OF ARLINGTON HEIGHTS

WARRANT REGISTER

CHECK DATE: 4/30/2026

CHECK #	ACCOUNT #	VENDOR NAME/#	DESCRIPTION	AMOUNT	TOTAL AMOUNT
Department 9555	**DEBT SVC POLICE STATION 2016**				
					$375,425.00
902834	301-9555-560150-	UMB BANK	2026 DEBT SERVICE	$375,425.00	
			DEPARTMENT 9555 TOTAL:	$375,425.00	

VILLAGE OF ARLINGTON HEIGHTS

WARRANT REGISTER

CHECK DATE: 4/30/2026

CHECK #	ACCOUNT #	VENDOR NAME/#	DESCRIPTION	AMOUNT	TOTAL AMOUNT
Department 9556	**DEBT SVC STORM WATER CONT 2018**				
					$129,575.00
902834	301-9556-560150-	UMB BANK	2026 DEBT SERVICE	$129,575.00	
			DEPARTMENT 9556 TOTAL:	$129,575.00	

VILLAGE OF ARLINGTON HEIGHTS

WARRANT REGISTER

CHECK DATE: 4/30/2026

CHECK #	ACCOUNT #	VENDOR NAME/#	DESCRIPTION	AMOUNT	TOTAL AMOUNT
Department 9557	**DEBT SVC 2019 REFUNDING 2011**				
					$31,125.00
902834	301-9557-560150-	UMB BANK	2026 DEBT SERVICE	$31,125.00	
			DEPARTMENT 9557 TOTAL:	$31,125.00	

VILLAGE OF ARLINGTON HEIGHTS

WARRANT REGISTER

CHECK DATE: 4/30/2026

CHECK #	ACCOUNT #	VENDOR NAME/#	DESCRIPTION	AMOUNT	TOTAL AMOUNT
Department 9558	**DEBT SVC 2020 GO BONDS**				
					$136,700.00
902834	301-9558-560150-	UMB BANK	2026 DEBT SERVICE	$136,700.00	
			DEPARTMENT 9558 TOTAL:	$136,700.00	

VILLAGE OF ARLINGTON HEIGHTS

WARRANT REGISTER

CHECK DATE: 4/30/2026

CHECK #	ACCOUNT #	VENDOR NAME/#	DESCRIPTION	AMOUNT	TOTAL AMOUNT
Department 9561	**DEBT SERVICE 2024 GO BOND**				
					$429,250.00
902834	301-9561-560150-	UMB BANK	2026 DEBT SERVICE	$429,250.00	
			DEPARTMENT 9561 TOTAL:	$429,250.00	
			WARRANT TOTAL:	**$2,634,277.68**	

VILLAGE OF ARLINGTON HEIGHTS
INC. 1887

Village Board of Trustees
5/4/2026

Item: 107th Memorial Day Parade and Ceremony
Department: Integrated Services

Item Description:
Greg Padovani will speak about the upcoming 107th Annual Memorial Day Parade and Ceremony

ATTACHMENTS:
None

VILLAGE OF ARLINGTON HEIGHTS
INC. 1887

Village Board of Trustees
5/4/2026

Item: A Resolution Approving a Plat of Subdivision for 1920 N. Chestnut Avenue - PC#24-018
Department: Planning & Community Development

Item Description:
At the December 1, 2025, the Village Board approved Resolution 25-150 authorizing the approval of a Preliminary Plat of Subdivision to subdivide one lot at 1920 N. Chestnut Avenue into four total lots. Three lots for single-family residential development and one lot for on-site stormwater detention. The Petitioner has prepared a Final Plat of Subdivision, which contains the necessary information as required by Chapter 29 of the Municipal Code for Final Plat of Subdivision approval. The Village has reviewed the Final Plat of Subdivision and verified that it is substantially compliant with the preliminary approvals as outlined in Resolution #25-150.

Recommendation: The Plan Commission recommends **APPROVAL** of the Final Plat of Subdivision, subject to the following conditions:

1. Payment of all applicable engineering fees and the provision of all surety bonds, public improvement deposits, and maintenance guarantees (as required under Chapter 29 of the Village Code) must be provided one week prior to appearing at a Village Board meeting.
2. The Petitioner will provide the Final Plat of Subdivision, as approved by the Plan Commission, printed on mylar and submitted to the Village, with signature obtained from all parties except those to be coordinated by the Village, no less than one week prior to Village Board approval.
3. Payment of all anticipated cash contributions in lieu of land dedication for library, park and recreational purposes, and school sites to serve the immediate and future needs of the residents shall be provided at the time of building permit.

ATTACHMENTS:
1. Resolution Approving Final Plat of Subdivision - 1920 N. Chestnut Ave.
2. PC24-018 Final Plat PC Memo
3. Public Comment Letter_Pucci

4. Public Comment Letter_Sinclair
5. Final Plat of Chestnut Woods Subdivision
6. Exhibit A - Aerial
7. Exhibit B - Plat of Survey
8. Resolution #25-150 Preliminary Plat of Subdivision - 1920 N Chestnut Ave

VILLAGE OF ARLINGTON HEIGHTS

RESOLUTION NO. _____

A RESOLUTION APPROVING A FINAL PLAT OF SUBDIVISION
(1920 N. Chestnut Avenue)

WHEREAS, Clim Development, LLC (*"Owner"*) is the owner of that certain property commonly known as 1920 N. Chestnut Avenue, Arlington Heights, Illinois (*"Property"*); and

WHEREAS, the Owner desires to subdivide the Property into the Property into three residential lots and one dedicated on-site stormwater detention lot (*"Proposed Subdivision"*), as depicted on the Final Plat of Chestnut Woods Subdivision, prepared by Kanthaphixay Land Surveying, consisting of two sheets, with a last revision date of June 10, 2025, a copy of which is attached to and, by this reference, made a part of this Resolution as Exhibit A (*"Final Plat"*); and

WHEREAS, the Owner filed applications with the Village for preliminary and final approval of a plat of subdivision for the Proposed Subdivision, pursuant to Sections 29-212 through 29-214 of the "Municipal Code of Arlington Heights, Illinois, 1995," as amended (*"Village Code"*); and

WHEREAS, on December 1, 2025, the President and Board of Trustees adopted Resolution No. R2025-150, approving a preliminary plat of subdivision for the Proposed Subdivision of the Property in accordance with all applicable Village procedures and requirements; and

WHEREAS, following approval by the President and Board of Trustees of the preliminary plat of subdivision, the Owner submitted a final plat of subdivision that is substantially in accordance with the preliminary plat of subdivision; and

WHEREAS, on March 25, 2026, the Plan Commission of the Village of Arlington Heights (*"Plan Commission"*) recommended approval of the proposed Final Plat, subject to specified development conditions; and

WHEREAS, having considered the findings and recommendations of the Plan Commission, the President and Board of Trustees have found and determined that it will serve and be in the best interest of the Village and its residents to approve the Final Plat for the Property;

NOW, THEREFORE, BE IT RESOLVED BY THE PRESIDENT AND BOARD OF TRUSTEES OF THE VILLAGE OF ARLINGTON HEIGHTS, COOK COUNTY, ILLINOIS, as follows:

SECTION 1. RECITALS. The facts and statements contained in the preamble to this Resolution are found to be true and correct and are hereby adopted as part of this Resolution.

SECTION 2. APPROVAL OF FINAL PLAT. Subject to, and contingent upon, the conditions, restrictions, and provisions set forth in Section 3 of this Resolution, the Final Plat is hereby approved as the final plat of subdivision for the Property pursuant to Section 29-214 of the Village Code and the home rule powers of the Village.

SECTION 3. CONDITION OF APPROVAL. Approval of the Final Plat in Section 2 of this Resolution is conditioned upon the Owner's payment of all impact fees associated with the development of the Property for library, park and recreational purposes, and school sites to serve the immediate and future needs of the residents prior to issuance of a building permit for the Property, in accordance with, and as required by, Chapter 29 of the Village Code.

SECTION 4. EXECUTION OF FINAL PLAT. Upon satisfaction of the condition set forth in Section 3 of this Resolution, the Village President and the Village Clerk are hereby authorized and directed to execute and seal, on behalf of the Village, the Final Plat.

SECTION 5. RECORDATION OF FINAL PLAT. Upon execution of the Final Plat by the Village President and the Village Clerk, as provided in Section 4 of this Resolution, the Village Clerk is directed to cause the Final Plat to be recorded on title to the Property in the office of the Cook County Clerk Recording Division.

SECTION 6. AMENDMENTS. Any amendments to the approval granted in Section 2 of this Ordinance that may be requested by the Owner after the effective date of this Ordinance may be granted only pursuant to the procedures, and subject to the standards and limitations, provided in the Zoning Code.

SECTION 7. EFFECTIVE DATE. This Resolution will be in full force and effect from and after its passage and approval as provided by law. The approval in Section 2 of this Resolution will be null and void in the event that all conditions are not satisfied within 180 days after the passage of this Resolution, unless that date is extended by the Village Board of Trustees.

AYES:

NAYS:

PASSED AND APPROVED THIS ___ day of _____, 2026

_____
Village President

ATTEST:

_____
Village Clerk

EXHIBIT A

FINAL PLAT

AREA SUMMARY:
LOT 1 = 13,320 SQ. FT. OR 0.306 ACRE
LOT 2= 11,100 SQ. FT. OR 0.255 ACRE
LOT 3 = 11,100 SQ. FT. OR 0.255 ACRE
LOT 4 = 8,880 SQ. FT. OR 0.203 ACRE
TOTAL AREA = 44,400 SQ.FT. OR 1.019 ACRE

EASEMENT TO BE GRANTED AREA SUMMARY:
LOT 1 = 1,880 SQ. FT. OR 0.043 ACRE
LOT 2 = 1,805 SQ. FT. OR 0.041 ACRE
LOT 3= 1,805 SQ. FT. OR 0.041 ACRE
LOT 4= 1,730 SQ. FT. OR 0.040 ACRE
TOTAL AREA = 7,220 SQ.FT. OR 0.166 ACRE

FINAL PLAT
OF
CHESTNUT WOODS SUBDIVISION

THAT PART OF THE EAST 1/2 OF THE SOUTHEAST 1/4 OF SECTION 18, TOWNSHIP 42 NORTH, RANGE 11 EAST OF THE THIRD PRINCIPAL MERIDIAN, LYING NORTH OF THE CENTERLINE OF PALATINE ROAD, IN COOK COUNTY, ILLINOIS:

BEGINNING AT THE NORTHEAST CORNER OF THE LAND HEREIN DESCRIBED; THENCE SOUTH 00 DEGREES 00 MINUTES 00 SECONDS EAST, A DISTANCE OF 150.00 FEET TO THE SOUTHEAST CORNER OF SAID LAND; THENCE SOUTH 90 DEGREES 00 MINUTES 00 SECONDS WEST, A DISTANCE OF 296.00 FEET TO THE SOUTHWEST CORNER OF SAID LAND; THENCE NORTH 00 DEGREES 00 MINUTES 00 SECONDS WEST, A DISTANCE OF 150.00 FEET TO THE NORTHWEST CORNER OF SAID LAND; THENCE NORTH 90 DEGREES 00 MINUTES 00 SECONDS EAST, A DISTANCE OF 296.00 FEET TO THE POINT OF BEGINNING, CONTAINING 44,400 SQUARE FEET (1.019 ACRES), MORE OR LESS.

BASIS OF BEARINGS: BEARINGS ARE BASED ON THE ILLINOIS STATE PLANE COORDINATE SYSTEM, EAST ZONE, NAD 83.

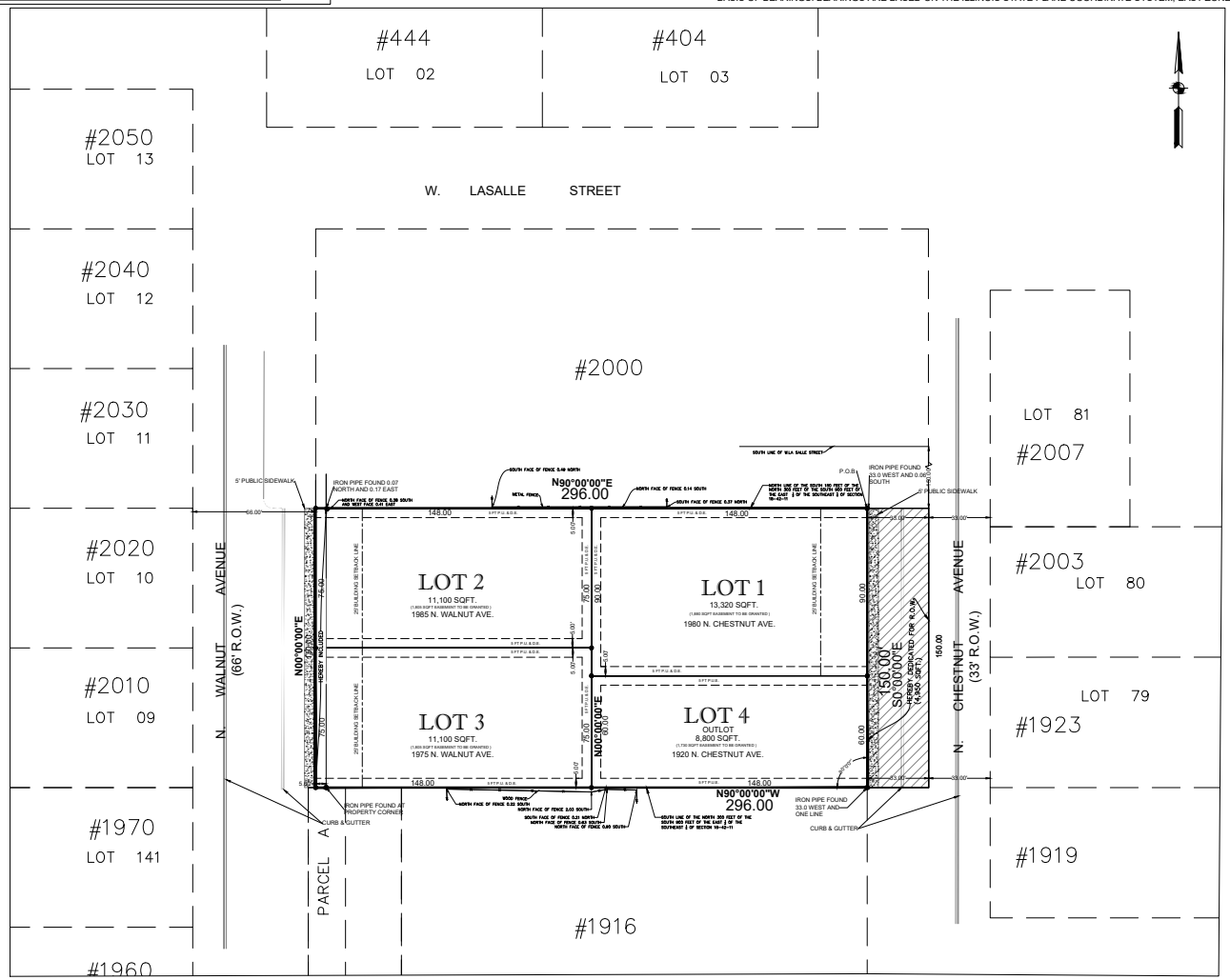

LEGEND
- BOUNDARY LINE OF SUBDIVISION
- PROPOSED LOT LINE
- LOT - PROPOSED LOT NUMBER
- LOT - EXISTING LOT NUMBER
- EXISTING FOUND IRON PIPE
- PROPOSED SET 18" IRON PIPE
- P.U.&D.E. PUBLIC UTILITY & DRAINAGE EASEMENT
- P.U.E. PUBLIC UTILITY EASEMENT
- B.S.L. BUILDING SETBACK LINE
- B/C = BACK OF CURB
- B-B = BACK TO BACK OF CURB
- (D) DEED DATA
- (M) MEASURED DATA
- (P.O.B.) POINT OF BEGINNING
- PROPOSED RIGHT-OF-WAY DEDICATION

EASEMENT DETAIL (NOT TO SCALE)
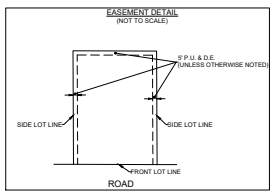

OUTLOT NOTE:
AT THE COMPLETION OF THE 18-MONTH MAINTENANCE PERIOD FOR THE SUBDIVISION'S PUBLIC IMPROVEMENTS AND AFTER ACCEPTANCE OF THE PUBLIC IMPROVEMENTS BY THE VILLAGE, THE OWNER SHALL DEED OUTLOT 4 TO THE VILLAGE TO BECOME A PUBLICLY OWNED AND MAINTAINED LOT FOR STORMWATER MANAGEMENT PURPOSES.

RICHARD R. KANTHAPHIXAY 3807 PROFESSIONAL LAND SURVEYOR STREAMWOOD ILLINOIS

STATE OF ILLINOIS) s.s.
COUNTY OF COOK)

I, RICHARD R. KANTHAPHIXAY , a Illinois Professional land Surveyor, hereby certify that a survey has been made, at and under my direction, of the property described above, and that the survey hereon drawn is a correct representation of said survey and conforms to the current Illinois minimum standards for a boundary survey.

Streamwood, Illinois, FEBRUARY 09, A.D. 2026

By _____
Illinois Professional Land Surveyor
Certificate No. 3807
Expiration date: 11-30-2026

	DATE	
1	11/12/2025	ISSUED FOR DESIGN COORDINATION
2	02/11/2026	ISSUED FOR REVIEW
3		
4		
5		
6		

FINAL SUBDIVISION PLAT
1920 N. CHESTNUT AVENUE
ARLINGTON HEIGHTS, ILLINOIS

KANTHAPHIXAY
Land Surveying
17 N. Ridge Court, Streamwood IL 60107
Phone: (224) 425-0009
Cell: (630) 973-7491

Ordered By: CWLand, LLC
Field work done on 09-17-2024
Drawn By: RD

BOOK
PAGE
SCALE 1" = 30'
DRAWN BY: RD
CHKD BY: RRK
SHEET 1 OF 1 SHEETS
PROJ # 24-059

FINAL PLAT OF CHESTNUT WOODS SUBDIVISION

OWNER'S CERTIFICATE:

STATE OF ILLINOIS)
)SS
COUNTY OF COOK)

CLIM DEVELOPMENT LLC, DOES HEREBY CERTIFY THAT IT IS THE TITLE OWNER OF THE PROPERTY DESCRIBED HEREON AND THAT IT HAS CAUSED THE SAID PROPERTY TO BE SURVEYED AND SUBDIVIDED AS SHOWN HEREON.
ADDITIONALLY, IT DOES HEREBY CERTIFY THAT THE PROPERTY HEREON DESCRIBED IS LOCATED WITHIN THE BOUNDARIES OF:
ELEMENTARY SCHOOL DISTRICT CONSOLIDATED COMMUNITY SCHOOL DISTRICT #25
TOWNSHIP HIGH SCHOOL DISTRICT #214
HARPER COMMUNITY COLLEGE DISTRICT #512.

DATED THIS 26th DAY OF February A.D. 2026

Clim manager
CLIM DEVELOPMENT, LLC

NOTARY CERTIFICATE:

STATE OF ILLINOIS)
)SS
COUNTY OF COOK)

I, Gayle Glazer, A NOTARY PUBLIC, IN AND FOR SAID COUNTY IN THE STATE AFORESAID DO HEREBY CERTIFY THAT VITALIE CLIM, MANAGER, CLIM DEVELOPMENT, LLC PERSONALLY KNOWN TO ME TO BE THE SAME PERSONS WHOSE NAMES ARE SUBSCRIBED TO THE FOREGOING INSTRUMENT AS OWNERS OF THE PROPERTY DESCRIBED HEREON, APPEARED BEFORE ME THIS DAY IN PERSON AND ACKNOWLEDGED THEY SIGNED THE SAID INSTRUMENT AS THEIR OWN FREE AND VOLUNTARY ACT FOR THE USES AND PURPOSES THEREIN SET FORTH.

GIVEN UNDER MY HAND AND NOTARIAL SEAL THIS 26th DAY OF February, 2026

NOTARY PUBLIC: Gayle L. Glazer

GAYLE L GLAZER
OFFICIAL SEAL
Notary Public - State of Illinois
Commission No. 992695
My Commission Expires December 14, 2027

DRAINAGE CERTIFICATE

STATE OF ILLINOIS)
)SS
COUNTY OF COOK)

TO THE BEST OF OUR KNOWLEDGE AND BELIEF, THE DRAINAGE OF SURFACE WATERS WILL NOT BE CHANGED BY THE CONSTRUCTION OF THIS SUBDIVISION OR ANY PART THEREOF, OR, THAT IF SUCH SURFACE WATER DRAINAGE WILL BE CHANGED, REASONABLE PROVISION HAS BEEN MADE FOR COLLECTION AND DIVERSION OF SUCH SURFACE WATERS INTO PUBLIC AREAS OR DRAINS WHICH THE (OWNER, SUBDIVIDER) HAS A RIGHT TO USE, AND THAT SUCH SURFACE WATERS WILL BE PLANNED FOR IN ACCORDANCE WITH GENERALLY ACCEPTED ENGINEERING PRACTICES, SO AS TO REDUCE THE LIKELIHOOD OF DAMAGE TO THE ADJOINING PROPERTY BECAUSE OF THE CONSTRUCTION OF THE SUBDIVISION.

DATED THIS 26th DAY OF February, 2026

S. Otterson
IL REG. PROF. ENGINEER

Clim manager Clim Development
OWNER OR ATTORNEY

EASEMENT PROVISIONS

An easement for serving the subdivision and other property with electric and communication service is hereby reserved for and granted to:
Commonwealth Edison Company
and
SBC - Ameritech Illinois, a.k.a. Illinois Bell Telephone Company, Grantees,

their respective licensees, successors and assigns jointly and severally, to construct, operate, repair, maintain, modify, reconstruct, replace, supplement, relocate and remove, from time to time, poles, guys, anchors, wires, cables, conduits, manholes, transformers, pedestals, equipment cabinets or other facilities used in connection with overhead and underground transmission and distribution of electricity, communications, sounds and signals in, over, under, across, along and upon the surface of the property shown within the dashed or dotted lines (or similar designation) on the plat and marked "Easement", "Utility Easement", "Public Utility Easement", "P.U.E" (or similar designation), the property designated in the Declaration of Condominium and/or on this plat as "Common Elements", and the property designated on the plat as "common area or areas", and the property designated on the plat for streets and alleys, whether public or private, together with the rights to install required service connections over or under the surface of each lot and common area or areas to serve improvements thereon, or on adjacent lots, and common area or areas, the right to cut, trim or remove trees, bushes, roots and saplings and to clear obstructions from the surface and subsurface as may be reasonably required incident to the rights herein given, and the right to enter upon the subdivided property for all such purposes. Obstructions shall not be placed over Grantees' facilities or in, upon or over the property within the dashed or dotted lines (or similar designation) marked "Easement", "Utility Easement", "Public Utility Easement", "P.U.E" (or similar designation) without the prior written consent of Grantees. After installation of any such facilities, the grade of the subdivided property shall not be altered in a manner so as to interfere with the proper operation and maintenance thereof.

The term "Common Elements" shall have the meaning set forth for such term in the *"Condominium Property Act"*, Chapter 765 ILCS 605/2(c), as amended from time to time.

The term "common area or areas" is defined as a lot, parcel or area of real property, the beneficial use and enjoyment of which is reserved in whole or as an apportionment to the separately owned lots, parcels or areas within the planned development, even though such be otherwise designated on the plat by terms such as "outlots", "common elements", "open space", "open area", "common ground", "parking" and "common area". The term "common area or areas", and "Common Elements" include real property surfaced with interior driveways and walkways, but excludes real property physically occupied by a building, Service Business District or structures such as a pool, retention pond or mechanical equipment.

Relocation of facilities will be done by Grantees at cost of the Grantor/Lot Owner, upon written request.

COMMONWEALTH EDISON COMPANY
EASEMENT APPROVED AND ACCEPTED.

BY: [signature] DATE: Feb 19, 2026
TITLE Sr. Real Estate Rep

AMERITECH AT&T - Illinois Bell
EASEMENT APPROVED AND ACCEPTED.

BY: [signature] DATE: 19, 2026
TITLE Senior Specialist OSP

PUBLIC UTILITY & DRAINAGE EASEMENT (P.U. & D.E.) PROVISIONS

A PERMANENT NONEXCLUSIVE EASEMENT IS HEREBY RESERVED FOR AND GRANTED TO ASTOUND, COMCAST CABLE, NICOR GAS, THEIR RESPECTIVE SUCCESSORS AND ASSIGNS, IN, UPON, ACROSS, OVER, UNDER, AND THROUGH THE AREAS SHOWN AND LABELED "5 FT P.U. & D.E." ON THE ATTACHED PLAT OF SUBDIVISION FOR THE PURPOSE OF INSTALLING, CONSTRUCTING, INSPECTING, OPERATING, REPLACING, RENEWING, ALTERING, ENLARGING, REMOVING, REPAIRING, CLEANING AND MAINTAINING CABLES, CONDUITS, PIPES, POLES, WIRES AND SUCH OTHER STRUCTURES AND APPURTENANCES AS MAYBE NECESSARY OR CONVENIENT FOR FURNISHING PUBLIC UTILITY SERVICES, TOGETHER WITH THE RIGHT OF INGRESS AND EGRESS ACROSS AND THROUGH THE EASEMENTS FOR THE PERSONS AND EQUIPMENT TO DO ANY OR ALL OF THE ABOVE WORK. THE RIGHT IS ALSO HEREBY GRANTED TO CUT DOWN, TRIM OR REMOVE ANY TREES, SHRUBS OR OTHER PLANTS ON THE EASEMENTS AS WELL AS REMOVE ANY OTHER FENCE OR STRUCTURE THAT MAY INTERFERE WITH THE OPERATION OF THE ABOVE OR WITH THE EXERCISE OF ANY RIGHTS UNDER THIS GRANT OF EASEMENT. ALL THE EASEMENTS INDICATED SHALL BE PERPETUAL, EXCEPT THOSE IDENTIFIED AS "TEMPORARY."

ASTOUND
EASEMENT APPROVED AND ACCEPTED.

BY: [signature] DATE: 2-18, 2026
TITLE Construction Project Mgr

COMCAST CABLE
EASEMENT APPROVED AND ACCEPTED.

BY: [signature] DATE: Feb 19, 2026
TITLE RIGHT-OF-WAY SUPERVISOR

NICOR GAS
EASEMENT APPROVED AND ACCEPTED.

BY: [signature] DATE: 2/19, 2026
TITLE Land Agent

CERTIFICATE OF PLANNING AND ZONING COMMISSION

STATE OF ILLINOIS)
)SS
COUNTY OF COOK)

UNDER THE AUTHORITY PROVIDED BY 65 ILCS 5/11-12 AS AMENDED BY THE STATE LEGISLATURE OF THE STATE OF ILLINOIS AND ORDINANCE ADOPTED BY THE VILLAGE BOARD OF THE VILLAGE OF ARLINGTON HEIGHTS, ILLINOIS, THIS PLAT WAS GIVEN APPROVAL BY THE VILLAGE OF ARLINGTON HEIGHTS AND MUST BE RECORDED WITHIN SIX MONTHS OF THE DATE OF APPROVAL BY THE VILLAGE BOARD, OTHERWISE IT IS NULL AND VOID.

APPROVED BY THE PLAN COMMISSION AT A MEETING HELD _____

CHAIRMAN

SECRETARY

APPROVED BY THE VILLAGE BOARD OF TRUSTEES AT A MEETING HELD _____

PRESIDENT

VILLAGE CLERK

APPROVED BY THE VILLAGE ENGINEER

APPROVED BY THE VILLAGE COLLECTOR

VILLAGE ENGINEER CERTIFICATE

STATE OF ILLINOIS)
)SS
COUNTY OF COOK)

I, _____, VILLAGE ENGINEER OF THE VILLAGE OF ARLINGTON HEIGHTS, ILLINOIS, HEREBY CERTIFY THAT THE IMPROVEMENTS DESCRIBED IN THIS PLAT AND THE PLANS AND SPECIFICATIONS THEREFORE MEET THE MINIMUM REQUIREMENTS OF SAID VILLAGE AND HAVE BEEN APPROVED BY ALL PUBLIC AUTHORITIES HAVING JURISDICTION THEREOF.
DATED AT ARLINGTON HEIGHTS, COOK COUNTY, ILLINOIS, THIS___ DAY OF_____, 20___.

VILLAGE ENGINEER

VILLAGE CLERK'S CERTIFICATE

STATE OF ILLINOIS)
)SS
COUNTY OF COOK)

I, _____, VILLAGE CLERK OF THE VILLAGE OF ARLINGTON HEIGHTS, ILLINOIS, HEREBY CERTIFY THAT THIS PLAT WAS PRESENTED TO AND BY RESOLUTION DULY APPROVED BY THE BOARD OF TRUSTEES OF SAID VILLAGE AT ITS MEETING HELD ON_____ 20____ AND THAT THE REQUIRED BOND OR OTHER GUARANTEE HAS BEEN POSTED FOR THE COMPLETION OF THE IMPROVEMENTS REQUIRED BY THE REGULATIONS OF SAID VILLAGE.

IN WITNESS WHEREOF I HAVE HERETO SET MY HAND AND SEAL OF THE VILLAGE OF

ARLINGTON HEIGHTS, ILLINOIS THIS ___ DAY OF _____, 20___.

VILLAGE CLERK

COUNTY CLERK'S CERTIFICATE

STATE OF ILLINOIS)
)SS
COUNTY OF COOK)

I, _____, COUNTY CLERK OF COOK COUNTY, ILLINOIS, DO HEREBY CERTIFY THAT THERE ARE NO DELINQUENT GENERAL TAXES, NO UNPAID FORFEITED TAXES, AND NO REDEEMABLE TAX SALES AGAINST ANY OF THE LAND INCLUDED IN THE ANNEXED PLAT.

I FURTHER CERTIFY THAT I HAVE RECEIVED ALL STATUTORY FEES IN CONNECTION WITH THE ANNEXED PLAT.

GIVEN UNDER MY HAND AND SEAL OF THE COUNTY CLERK, AT WHEATON, COOK COUNTY, ILLINOIS THIS___DAY OF_____, 20___.

COUNTY CLERK

COOK COUNTY RECORDER'S CERTIFICATE

STATE OF ILLINOIS)
)SS
COUNTY OF COOK)

THIS INSTRUMENT_____ WAS FILED FOR RECORD IN THE RECORDER'S OFFICE OF COOK COUNTY, ILLINOIS, AFORESAID ON THE _____DAY OF_____, 20____, AT _____ O'CLOCK_____M., AND WAS RECORDED IN BOOK_____ OF PLATS ON PAGE _____.

RECORDER

SEND TAX BILL TO :
CLIM DEVELOPMENT LLC
919 S QUINCY STREET
HINSDALE, IL 60521

STORMWATER DETENTION EASEMENT PROVISIONS

~~ALL EASEMENTS INDICATED AS STORMWATER DETENTION EASEMENTS ON THIS PLAT ARE RESERVED FOR AND GRANTED TO THE VILLAGE OF~~ ARLINGTON HEIGHTS FOR THE BENEFIT OF THE PUBLIC.

NO PERMANENT BUILDINGS OR OTHER OBSTRUCTIONS SHALL BE PLACED ON SAID EASEMENT BUT THE SAME MAY BE USED FOR PURPOSES THAT DO NOT ADVERSELY AFFECT THE STORAGE OR FREE FLOW OF STORMWATER AND THE OPERATION OF THE STORMWATER MANAGEMENT SYSTEM. THE OWNER SHALL BE RESPONSIBLE FOR MAINTAINING THE DRAINAGE PATHS AND STORMWATER DETENTION APPLICABLE TO HIS LOT AND SHALL NOT MODIFY GRADES, SLOPES, OR STORMWATER MANAGEMENT FACILITIES WITHOUT HAVING FIRST RECEIVED PRIOR WRITTEN APPROVAL OF THE VILLAGE OF ARLINGTON HEIGHTS.

IN THE EVENT THE OWNER FAILS TO PROPERLY MAINTAIN THE DRAINAGE OR STORMWATER DETENTION AREA EASEMENTS, THE VILLAGE OF ARLINGTON HEIGHTS AND ANY OTHER UNIT OF GOVERNMENT HAVING JURISDICTION OVER DRAINAGE ON THE SUBJECT PROPERTY AND ANY OWNER OF RECORD OF THE REAL ESTATE (OR PART THEREOF) SHALL, UPON TEN (10) DAYS PRIOR WRITTEN NOTICE, HAVE THE RIGHT TO PERFORM, OR HAVE PERFORMED ON ITS OR THEIR BEHALF, ANY MAINTENANCE WORK TO OR UPON THE STORMWATER DETENTION AREA WHICH IS REASONABLY NECESSARY TO INSURE ADEQUATE STORMWATER STORAGE AND FREE FLOW OF STORM WATER THROUGH THE DETENTION EASEMENT AREA.

IN THE EVENT THAT THE VILLAGE OF ARLINGTON HEIGHTS OR ANY OTHER UNIT OF GOVERNMENT HAVING JURISDICTION OVER DRAINAGE ON THE SUBJECT PROPERTY OR ANY OWNER OF RECORD OF THE REAL ESTATE (OR PART THEREOF), SHALL BE REQUIRED TO PERFORM, OR HAVE PERFORMED ON ITS OR THEIR BEHALF, ANY MAINTENANCE WORK TO OR UPON THE DRAINAGE OR STORMWATER DETENTION AREA EASEMENT, THE EXPENSE THEREOF, INCLUDING ANY ADMINISTRATIVE COSTS, SHALL UPON RECORDATION OF A NOTICE OF LIEN WITHIN SIXTY (60) DAYS OF COMPLETION OF THE WORK, CONSTITUTE A LIEN AGAINST HIS LOT WHICH MAY BE FORECLOSED BY ANY ACTION BROUGHT BY OR ON BEHALF OF THE VILLAGE OF ARLINGTON HEIGHTS AND/OR OTHER UNIT OF GOVERNMENT HAVING JURISDICTION OVER DRAINAGE ON THE SUBJECT PROPERTY AND/OR ANY OWNER OF RECORD OF THE REAL ESTATE (OR PART THEREOF).

DEED OF DEDICATION

STATE OF ILLINOIS)
)SS
COUNTY OF COOK)

WE, THE UNDERSIGNED, VITALIE CLIM, MANAGER OF CLIM DEVELOPMENT LLC, OWNER OF THE REAL ESTATE SHOWN AND DESCRIBED HEREIN, DO HEREBY LAY OFF, PLAT AND SUBDIVIDE SAID REAL ESTATE IN ACCORDANCE WITH THE WITHIN PLAT. THIS SUBDIVISION SHALL BE KNOWN AND DESIGNATED AS CHESTNUT WOODS, AN ADDITION TO THE VILLAGE OF ARLINGTON HEIGHTS, COOK COUNTY. ALL STREETS AND ALLEYS AND PUBLIC OPEN SPACES SHOWN AND NOT HERETOFORE DEDICATED ARE HEREBY DEDICATED TO THE PUBLIC. FRONT AND SIDE YARD BUILDING SETBACK LINES ARE ESTABLISHED AS SHOWN ON THIS PLAT, BETWEEN WHICH LINES AND THE PROPERTY LINES OF THE STREETS, THERE SHALL BE ERECTED OR MAINTAINED NO BUILDING OR STRUCTURE. THERE ARE STRIPS OF GROUND, 5 FEET IN WIDTH, AS SHOWN ON THE PLAT AND MARKED 'EASEMENT' RESERVED FOR THE USE OF PUBLIC UTILITIES FOR THE INSTALLATION OF WATER AND SEWER MAINS, POLES, DUCTS, LINES AND WIRES, SUBJECT AT ALL TIMES TO THE PROPER AUTHORITIES AND TO THE EASEMENT HEREIN RESERVED. NO PERMANENT OR OTHER STRUCTURES ARE TO BE ERECTED OR MAINTAINED UPON THESE STRIPS OF LAND, BUT OWNERS OF LOTS IN THIS SUBDIVISION SHALL TAKE THEIR TITLES SUBJECT TO THE RIGHTS OF THE PUBLIC UTILITIES, AND TO THE RIGHTS OF THE OWNERS OF OTHER LOTS IN THIS SUBDIVISION. ~~AT THE COMPLETION OF THE 18 MONTH MAINTENANCE PERIOD FOR THE SUBDIVISION'S PUBLIC IMPROVEMENTS AND AFTER ACCEPTANCE OF THE PUBLIC IMPROVEMENTS BY THE VILLAGE, THE OWNER SHALL DEED OUTLOT A TO THE VILLAGE TO BECOME A PUBLICLY OWNED AND MAINTAINED LOT FOR STORMWATER MANAGEMENT PURPOSES.~~ THE RIGHT TO ENFORCE THESE PROVISIONS BY INJUNCTION, TOGETHER WITH THE RIGHT TO CAUSE THE REMOVAL BY DUE PROCESS OF LAW, OF ANY STRUCTURE OR PART THEREOF ERECTED OR MAINTAINED IN VIOLATION, IS HEREBY DEDICATED TO THE PUBLIC, AND RESERVED TO THE SEVERAL OWNERS OF THE SEVERAL LOTS IN THIS SUBDIVISION AND TO THEIR HEIRS AND ASSIGNS. CLIM DEVELOPMENT LLC, AN ILLINOIS LIMITED LIABILITY COMPANY,

BY: Clim manager Clim Development
VITALIE CLIM, MANAGER

WITNESS OUR HANDS AND SEALS THIS 26th DAY OF February 2026

STATE OF ILLINOIS)
)SS
COUNTY OF COOK)

BEFORE ME THE UNDERSIGNED NOTARY PUBLIC, IN AND FOR THE COUNTY AND STATE AFORESAID, PERSONALLY APPEARED VITALIE CLIM, AND EACH SEPARATELY AND SEVERALLY ACKNOWLEDGED THE EXECUTION OF THE FOREGOING INSTRUMENT AS HIS OR HER VOLUNTARY ACT AND DEED, FOR THE PURPOSES THEREIN EXPRESSED.

WITNESS OUR HANDS AND NOTARIAL SEAL THIS 26th DAY OF 20 26

Gayle L. Glazer
NOTARY PUBLIC

GAYLE L GLAZER
OFFICIAL SEAL
Notary Public - State of Illinois
Commission No. 992695
My Commission Expires December 14, 2027

SURVEYOR AUTHORIZATION TO RECORD

I HEREBY DESIGNATE THE VILLAGE OF ARLINGTON HEIGHTS, AND/OR REPRESENTATIVES THEREOF, TO RECORD THIS PLAT, A TRUE COPY OF WHICH HAS BEEN RETAINED BY ME TO ASSURE NO CHANGES HAVE BEEN MADE TO SAID PLAT.

DATED THIS, 13th DAY OF NOVEMEBER, 2025, AT STREAMWOOD, COOK COUNTY, ILLINOIS.

KANTHAPHIXAY LAND SURVEYING
17 N. RIDGE COURT
STREAMWOOD, IL 60107

BY: RICHARD R. KANTHAPHIXAY

ILLINOIS PROFESSIONAL LAND SURVEYOR
RICHARD R. KANTHAPHIXAY LICENSE NO. 035.003807
LICENSE EXPIRES 11/30/2026

ILLINOIS REGISTERED LAND SURVEYOR CERTIFICATE

I, RICHARD R. KANTHAPHIXAY, hereby certify that I am an Illinois Registered Land Surveyor in compliance with the laws of the State of Illinois, and that this plat correctly represents a survey completed by me on November 12th, 2025; that all monuments and markers shown thereon actually exist, and that I have accurately shown the materials that they are made of.

Signature.

RICHARD R. KANTHAPHIXAY 3807 PROFESSIONAL LAND SURVEYOR STREAMWOOD ILLINOIS

Illinois Land Surveyor
No. 035.003807

	DATE
1	11/12/2025
2	02/11/2026
3	
4	
5	
6	

ISSUED FOR DESIGN COORDINATION
ISSUED FOR REVIEW

FINAL SUBDIVISION PLAT
1920 N. CHESTNUT AVENUE
ARLINGTON HEIGHTS, ILLINOIS

KANTHAPHIXAY
Land Surveying
17 N. Ridge Court, Streamwood IL 60107
Phone: (224) 425-0009
Cell: (630) 973-7491

Ordered BY: CMLand, LLC
Field work done on 08-17-2024
Drawn By: RD

SHEET 2 OF 2 SHEETS

VILLAGE OF ARLINGTON HEIGHTS
INC. 1887

Date: March 18, 2026

To: Arlington Heights Plan Commission

From: Dan Osoba, Planner II

Re: PC 24-018 Chestnut Woods Subdivision – Final Plat of Subdivision for Plan Commission Meeting on March 25, 2026

Background:

On December 1, 2025, the Village Board approved Resolution 25-150 authorizing approval of a Preliminary Plat of Subdivision to subdivide one lot at 1920 N. Chestnut Avenue into four total lots; three for single-family residential development and one on-site stormwater detention lot. Concurrently, the Village Board approved Ordinance 25-056 authorizing approval of variations from Chapter 28 to reduce the lot width and area of the on-site stormwater detention lot and to reduce the required front setback of Lot 1 from 40-feet to 25-feet. The petitioner has prepared a Final Plat of Subdivision, which contains the necessary information as required by Chapter 29 of the Municipal Code for Final Plat of Subdivision approval. The Village Staff Development Committee has reviewed the Final Plat of Subdivision and verified that it is substantially compliant with the preliminary approvals as outlined in Resolution 25-150 and Section 3 of Ordinance 25-056 which outlines conditions for the subdivision approval granted for the Chestnut Woods development.

There were several conditions of approval within Ordinance 25-056 that needed to be addressed as part of the Final Plat of Subdivision review. A general description of these conditions is outlined below:

- Compliance with Plans. Except for minor changes and site work approved by the Village Director of Building & Life Safety (for matters within their permitting authority) in accordance with all applicable Village standards, the development, use, operation, and maintenance of the Proposed Development and of the Property must be substantially compliant with the Preliminary Plat of Subdivision.
    - The Staff Development Committee (SDC) reviewed the Petitioner's Final Plat of Subdivision and associated Final Engineering Plans and Landscape Plans and found that they are substantial compliance with the Preliminary Plat of Subdivision, Preliminary Engineering Plans and Landscape Plans submitted pursuant to Resolution 25-150.

- Right-of-Way Infrastructure Improvements. The petitioner shall install adjacent right-of-way improvements on Chestnut Avenue and Walnut Avenue as shown in the Preliminary Engineering Plans, prepared by CIVILAND, PLLC, with a last revision date of September 15, 2025.
    - The right-of-way improvements shown in the Final Engineering Plans, prepared by CIVILAND, PLLC, with latest revision date December 17, 2025, are consistent with the aforementioned Preliminary Engineering Plans and compliant with Village Municipal Code.

- Required Fees. The Applicant must pay to the Village all fees required pursuant to Chapter 29 of the Municipal Code of Arlington Heights, Illinois, 1995, as amended (*"Village Code"*).
    - The petitioner has been informed of this requirement and has been provided all fees that will be due prior to appearing at a Village Board meeting and due prior to Building Permit issuance for new construction.

- Design Commission. Prior to the demolition of the existing home on the property and the submittal of building permit applications for any new home on the property, the owner must submit an application to the Village Design Commission for review and approval of the proposed new home.
    - The petitioner submitted three applications, one for each proposed new home, to the Village Design Commission for review. The Design Commission approved all three applications at the February 24, 2026 meeting of the Design Commission. The minutes of which are included in the agenda packet.

Recommendation: The Staff Development Committee recommends **APPROVAL** of the Final Plat of Subdivision, subject to the following conditions:

1. Payment of all applicable engineering fees and the provision of all surety bonds, public improvement deposits, and maintenance guarantees (as required under Chapter 29 of the Village Code) must be provided one week prior to appearing at a Village Board meeting.
2. The Petitioner will provide the Final Plat of Subdivision, as approved by the Plan Commission, printed on mylar and submitted to the Village, with signature obtained from all parties except those to be coordinated by the Village, no less than one week prior to Village Board approval.
3. Payment of all anticipated cash contributions in lieu of land dedication for library, park and recreational purposes, and school sites to serve the immediate and future needs of the residents shall be provided at time of building permit.

Dear Mr. Osoba,

I am Rick Pucci of 1919 N. Chestnut Ave. My wife, Ania, and I are writing to express serious concern regarding the proposed subdivision at 1918 N. Chestnut Ave.

We recently invested significant time and resources working with our architect and contractor to ensure our plans fully respect both the zoning requirements and the character of the neighborhood. It is, therefore, troubling to learn that an exception may be granted directly across the street.

Allowing a reduced setback of only 25 feet, along with sidewalks that do not meaningfully connect to existing infrastructure, would result in a structure out of scale with the surrounding homes. This would negatively impact both neighborhood aesthetics and property values.

We are also concerned about the potential need for additional street lighting tied to the sidewalk design. Increased nighttime lighting would directly affect our home, which is especially disappointing given that one of our goals in relocating was to avoid the excessive lighting common in the city.

We are planning a further $1.5 million investment in our property—an improvement we believe will enhance and preserve the character of the neighborhood. However, we intend to pause those plans until there is clarity on the outcome of this proposal.

We respectfully ask that you consider the broader impact on the neighborhood before approving any exceptions.

Thank you for your time and consideration.

Sincerely,
Rick and Ania Pucci
312-315-4659
1919 N. Chestnut Ave.

Hi Dan,
ARLINGTON HEIGHTS VILLAGE

We live at 1916 N. Chestnut Ave. Like most of the residents on Chestnut Ave. we were pleased to hear that the property at 1918 N. Chestnut was purchased and would be remodeled.

To everyone's dismay this was not a remodel but an out of place subdivision request that will be a impact on the surrounding homes with one large home floating out Infront with a 25 ft. set back from the street with the homes on either side (1916 & 1920) that have a 98 ft. set back.

With the homes at 1916 & 1920 neither of them have sidewalks or curbs, we believe this will further impact current residents value on both sides Chestnut to install a sidewalk and curb just Infront of 1918N. Chestnut.

We have been residents of Arlington Heights for over 35 years. When you drive around Arlington Heights you see a lot of smaller houses that are being upgraded/remodeled into much bigger homes. This project (Chestnut subdivision) seems to be out of place from what the Village has approved in the past.

We would respectfully ask that the village re-consider approving this project that will impact the 1900 block of north Chestnut Ave.

Thank you for consideration of fellow Arlington Heights residents.

Best Regards,
Don and Jane Sinclair
1916N. Chestnut Ave.

AREA SUMMARY:
LOT 1 = 13,320 SQ. FT. OR 0.306 ACRE
LOT 2= 11,100 SQ. FT. OR 0.255 ACRE
LOT 3 = 11,100 SQ. FT. OR 0.255 ACRE
LOT 4 = 8,880 SQ. FT. OR 0.203 ACRE
TOTAL AREA = 44,400 SQ.FT. OR 1.019 ACRE

EASEMENT TO BE GRANTED AREA SUMMARY:
LOT 1 = 1,880 SQ. FT. OR 0.043 ACRE
LOT 2 = 1,805 SQ. FT. OR 0.041 ACRE
LOT 3= 1,805 SQ. FT. OR 0.041 ACRE
LOT 4= 1,730 SQ. FT. OR 0.040 ACRE
TOTAL AREA = 7,220 SQ.FT. OR 0.166 ACRE

FINAL PLAT
OF
CHESTNUT WOODS SUBDIVISION

THAT PART OF THE EAST 1/2 OF THE SOUTHEAST 1/4 OF SECTION 18, TOWNSHIP 42 NORTH, RANGE 11 EAST OF THE THIRD PRINCIPAL MERIDIAN, LYING NORTH OF THE CENTERLINE OF PALATINE ROAD, IN COOK COUNTY, ILLINOIS:

BEGINNING AT THE NORTHEAST CORNER OF THE LAND HEREIN DESCRIBED; THENCE SOUTH 00 DEGREES 00 MINUTES 00 SECONDS EAST, A DISTANCE OF 150.00 FEET TO THE SOUTHEAST CORNER OF SAID LAND; THENCE SOUTH 90 DEGREES 00 MINUTES 00 SECONDS WEST, A DISTANCE OF 296.00 FEET TO THE SOUTHWEST CORNER OF SAID LAND; THENCE NORTH 00 DEGREES 00 MINUTES 00 SECONDS WEST, A DISTANCE OF 150.00 FEET TO THE NORTHWEST CORNER OF SAID LAND; THENCE NORTH 90 DEGREES 00 MINUTES 00 SECONDS EAST, A DISTANCE OF 296.00 FEET TO THE POINT OF BEGINNING, CONTAINING 44,400 SQUARE FEET (1.019 ACRES), MORE OR LESS.

BASIS OF BEARINGS: BEARINGS ARE BASED ON THE ILLINOIS STATE PLANE COORDINATE SYSTEM, EAST ZONE, NAD 83.

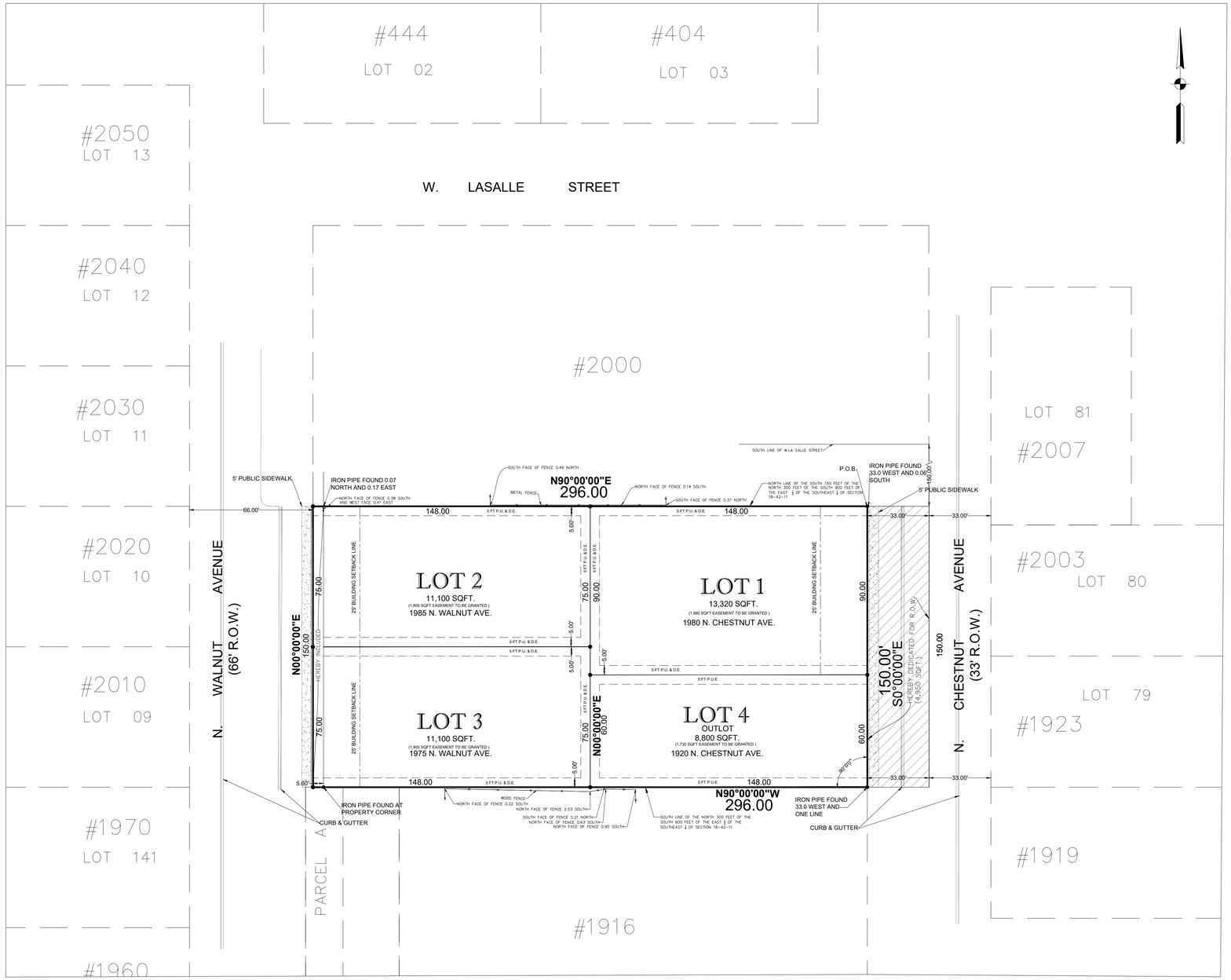

LEGEND
BOUNDARY LINE OF SUBDIVISION
PROPOSED LOT LINE
LOT - PROPOSED LOT NUMBER
LOT - EXISTING LOT NUMBER
- EXISTING FOUND IRON PIPE
- PROPOSED SET 18" IRON PIPE
P.U.&D.E. PUBLIC UTILITY & DRAINAGE EASEMENT
P.U.E. PUBLIC UTILITY EASEMENT
B.S.L. BUILDING SETBACK LINE
B/C = BACK OF CURB
B-B = BACK TO BACK OF CURB
(D) DEED DATA
(M) MEASURED DATA
(P.O.B.) POINT OF BEGINNING
PROPOSED RIGHT-OF-WAY DEDICATION

EASEMENT DETAIL
(NOT TO SCALE)

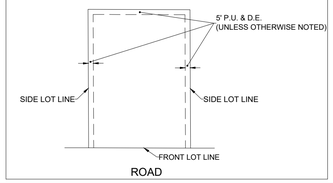

OUTLOT NOTE:
AT THE COMPLETION OF THE 18-MONTH MAINTENANCE PERIOD FOR THE SUBDIVISION'S PUBLIC IMPROVEMENTS AND AFTER ACCEPTANCE OF THE PUBLIC IMPROVEMENTS BY THE VILLAGE, THE OWNER SHALL DEED OUTLOT 4 TO THE VILLAGE TO BECOME A PUBLICLY OWNED AND MAINTAINED LOT FOR STORMWATER MANAGEMENT PURPOSES.

RICHARD R. KANTHAPHIXAY
3807
PROFESSIONAL LAND SURVEYOR
STREAMWOOD
ILLINOIS

STATE OF ILLINOIS)
COUNTY OF COOK) S.S.

I, RICHARD R. KANTHAPHIXAY , a Illinois Professional land Surveyor, hereby certify that a survey has been made, at and under my direction, of the property described above, and that the survey hereon drawn is a correct representation of said survey and conforms to the current Illinois minimum standards for a boundary survey.

Streamwood, Illinois, FEBRUARY 09, A.D. 2026

By _____
Illinois Professional Land Surveyor
Certificate No. 3807
Expiration date: 11-30-2026

	DATE	
1	11/12/2025	ISSUED FOR DESIGN COORDINATION
2	02/11/2026	ISSUED FOR REVIEW
3		
4		
5		
6		

FINAL SUBDIVISION PLAT
1920 N. CHESTNUT AVENUE
ARLINGTON HEIGHTS, ILLINOIS

KANTHAPHIXAY
Land Surveying
17 N. Ridge Court, Streamwood IL 60107
Phone: (224) 425-0009
Cell: (630) 973-7491

Ordered BY: CivilLand, LLC
Field work done on 09-17-2024
Drawn By: RD

FIELD VIEW: RD/DK
DRAWN BY: RD
CHECKED BY: RK
DATE: 02/10/2026
SCALE: HORZ: 1"=30' VERT: NONE
SHEET 1 OF 2 SHEETS
PROJ # 24-1020

FINAL PLAT
OF
CHESTNUT WOODS SUBDIVISION

OWNER'S CERTIFICATE:

STATE OF ILLINOIS)
)SS
COUNTY OF COOK)

CLIM DEVELOPMENT LLC, DOES HEREBY CERTIFY THAT IT IS THE TITLE OWNER OF THE PROPERTY DESCRIBED HEREON AND THAT IT HAS CAUSED THE SAID PROPERTY TO BE SURVEYED AND SUBDIVIDED AS SHOWN HEREON.
ADDITIONALLY, IT DOES HEREBY CERTIFY THAT THE PROPERTY HEREON DESCRIBED IS LOCATED WITHIN THE BOUNDARIES OF:
ELEMENTARY SCHOOL DISTRICT CONSOLIDATED COMMUNITY SCHOOL DISTRICT #25
TOWNSHIP HIGH SCHOOL DISTRICT #214
HARPER COMMUNITY COLLEGE DISTRICT #512.

DATED THIS 26th DAY OF February, A.D. 2026.

Clim manager
CLIM DEVELOPMENT, LLC

NOTARY CERTIFICATE:

STATE OF ILLINOIS)
)SS
COUNTY OF COOK)

I, Gayle Glazer, A NOTARY PUBLIC, IN AND FOR SAID COUNTY IN THE STATE AFORESAID DO HEREBY CERTIFY THAT VITALIE CLIM, MANAGER, CLIM DEVELOPMENT. LLC PERSONALLY KNOWN TO ME TO BE THE SAME PERSONS WHOSE NAMES ARE SUBSCRIBED TO THE FOREGOING INSTRUMENT AS OWNERS OF THE PROPERTY DESCRIBED HEREON, APPEARED BEFORE ME THIS DAY IN PERSON AND ACKNOWLEDGED THEY SIGNED THE SAID INSTRUMENT AS THEIR OWN FREE AND VOLUNTARY ACT FOR THE USES AND PURPOSES THEREIN SET FORTH.

GIVEN UNDER MY HAND AND NOTARIAL SEAL THIS 26th DAY OF February, 2026

NOTARY PUBLIC: Gayle L. Glazer

GAYLE L GLAZER
OFFICIAL SEAL
Notary Public - State of Illinois
Commission No. 992695
My Commission Expires December 28, 2027

DRAINAGE CERTIFICATE

STATE OF ILLINOIS)
)SS
COUNTY OF COOK)

TO THE BEST OF OUR KNOWLEDGE AND BELIEF, THE DRAINAGE OF SURFACE WATERS WILL NOT BE CHANGED BY THE CONSTRUCTION OF THIS SUBDIVISION OR ANY PART THEREOF, OR, THAT IF SUCH SURFACE WATER DRAINAGE WILL BE CHANGED, REASONABLE PROVISION HAS BEEN MADE FOR COLLECTION AND DIVERSION OF SUCH SURFACE WATERS INTO PUBLIC AREAS OR DRAINS WHICH THE (OWNER, SUBDIVIDER) HAS A RIGHT TO USE, AND THAT SUCH SURFACE WATERS WILL BE PLANNED FOR IN ACCORDANCE WITH GENERALLY ACCEPTED ENGINEERING PRACTICES, SO AS TO REDUCE THE LIKELIHOOD OF DAMAGE TO THE ADJOINING PROPERTY BECAUSE OF THE CONSTRUCTION OF THE SUBDIVISION.

DATED THIS 26th DAY OF February, 2026.

S. O'Hearne
IL REG. PROF. ENGINEER

Clim manager Clim Development
OWNER OR ATTORNEY

EASEMENT PROVISIONS

An easement for serving the subdivision and other property with electric and communication service is hereby reserved for and granted to:
Commonwealth Edison Company
and
SBC - Ameritech Illinois, a.k.a. Illinois Bell Telephone Company, Grantees,

their respective licensees, successors and assigns jointly and severally, to construct, operate, repair, maintain, modify, reconstruct, replace, supplement, relocate and remove, from time to time, poles, guys, anchors, wires, cables, conduits, manholes, transformers, pedestals, equipment cabinets or other facilities used in connection with overhead and underground transmission and distribution of electricity, communications, sounds and signals in, over, under, across, along and upon the surface of the property shown within the dashed or dotted lines (or similar designation) on the plat and marked "Easement", "Utility Easement", "Public Utility Easement", "P.U.E" (or similar designation), the property designated in the Declaration of Condominium and/or on this plat as "Common Elements", and the property designated on the plat as "common area or areas", and the property designated on the plat for streets and alleys, whether public or private, together with the rights to install required service connections over or under the surface of each lot and common area or areas to serve improvements thereon, or on adjacent lots, and common area or areas, the right to cut, trim or remove trees, bushes, roots and saplings and to clear obstructions from the surface and subsurface as may be reasonably required incident to the rights herein given, and the right to enter upon the subdivided property for all such purposes. Obstructions shall not be placed over Grantees' facilities or in, upon or over the property within the dashed or dotted lines (or similar designation) marked "Easement", "Utility Easement", "Public Utility Easement", "P.U.E" (or similar designation) without the prior written consent of Grantees. After installation of any such facilities, the grade of the subdivided property shall not be altered in a manner so as to interfere with the proper operation and maintenance thereof.

The term "Common Elements" shall have the meaning set forth for such term in the *"Condominium Property Act"*, Chapter 765 ILCS 605/2(c), as amended from time to time.

The term "common area or areas" is defined as a lot, parcel or area of real property, the beneficial use and enjoyment of which is reserved in whole or as an apportionment to the separately owned lots, parcels or areas within the planned development, even though such be otherwise designated on the plat by terms such as "outlots", "common elements", "open space", "open area", "common ground", "parking" and "common area". The term "common area or areas", and "Common Elements" include real property surfaced with interior driveways and walkways, but excludes real property physically occupied by a building, Service Business District or structures such as a pool, retention pond or mechanical equipment.

Relocation of facilities will be done by Grantees at cost of the Grantor/Lot Owner, upon written request.

COMMONWEALTH EDISON COMPANY
EASEMENT APPROVED AND ACCEPTED.

BY: [signature] DATE: Feb 19, 2026
TITLE Sr. Real Estate Rep

~~AMERITECH~~ AT&T - Illinois Bell
EASEMENT APPROVED AND ACCEPTED.

BY: [signature] DATE: 2/19, 2026
TITLE Senior Specialist OSP

PUBLIC UTILITY & DRAINAGE EASEMENT (P.U. & D.E.) PROVISIONS

A PERMANENT NONEXCLUSIVE EASEMENT IS HEREBY RESERVED FOR AND GRANTED TO ASTOUND, COMCAST CABLE, NICOR GAS, THEIR RESPECTIVE SUCCESSORS AND ASSIGNS, IN, UPON, ACROSS, OVER, UNDER, AND THROUGH THE AREAS SHOWN AND LABELED "5 FT P.U. & D.E." ON THE ATTACHED PLAT OF SUBDIVISION FOR THE PURPOSE OF INSTALLING, CONSTRUCTING, INSPECTING, OPERATING, REPLACING, RENEWING, ALTERING, ENLARGING, REMOVING, REPAIRING, CLEANING AND MAINTAINING CABLES, CONDUITS, PIPES, POLES, WIRES AND SUCH OTHER STRUCTURES AND APPURTENANCES AS MAYBE NECESSARY OR CONVENIENT FOR FURNISHING PUBLIC UTILITY SERVICES, TOGETHER WITH THE RIGHT OF INGRESS AND EGRESS ACROSS AND THROUGH THE EASEMENTS FOR THE PERSONS AND EQUIPMENT TO DO ANY OR ALL OF THE ABOVE WORK. THE RIGHT IS ALSO HEREBY GRANTED TO CUT DOWN, TRIM OR REMOVE ANY TREES, SHRUBS OR OTHER PLANTS ON THE EASEMENTS AS WELL AS REMOVE ANY OTHER FENCE OR STRUCTURE THAT MAY INTERFERE WITH THE OPERATION OF THE ABOVE OR WITH THE EXERCISE OF ANY RIGHTS UNDER THIS GRANT OF EASEMENT. ALL THE EASEMENTS INDICATED SHALL BE PERPETUAL, EXCEPT THOSE IDENTIFIED AS "TEMPORARY."

ASTOUND
EASEMENT APPROVED AND ACCEPTED.

BY: [signature] DATE: 2-18, 2026
TITLE Construction Project Mgr

COMCAST CABLE
EASEMENT APPROVED AND ACCEPTED.

BY: [signature] DATE: Feb 19, 2026
TITLE RIGHT-OF-WAY COORDINATOR

NICOR GAS
EASEMENT APPROVED AND ACCEPTED.

BY: [signature] DATE: 2/19, 2026
TITLE Land Agent

CERTIFICATE OF PLANNING AND ZONING COMMISSION

STATE OF ILLINOIS)
)SS
COUNTY OF COOK)

UNDER THE AUTHORITY PROVIDED BY 65 ILCS 5/11-12 AS AMENDED BY THE STATE LEGISLATURE OF THE STATE OF ILLINOIS AND ORDINANCE ADOPTED BY THE VILLAGE BOARD OF THE VILLAGE OF ARLINGTON HEIGHTS, ILLINOIS, THIS PLAT WAS GIVEN APPROVAL BY THE VILLAGE OF ARLINGTON HEIGHTS AND MUST BE RECORDED WITHIN SIX MONTHS OF THE DATE OF APPROVAL BY THE VILLAGE BOARD, OTHERWISE IT IS NULL AND VOID.

APPROVED BY THE PLAN COMMISSION AT A MEETING HELD _____

CHAIRMAN

SECRETARY

APPROVED BY THE VILLAGE BOARD OF TRUSTEES AT A MEETING HELD _____

PRESIDENT

VILLAGE CLERK

APPROVED BY THE VILLAGE ENGINEER

APPROVED BY THE VILLAGE COLLECTOR

VILLAGE ENGINEER CERTIFICATE

STATE OF ILLINOIS)
)SS
COUNTY OF COOK)

I, _____, VILLAGE ENGINEER OF THE VILLAGE OF ARLINGTON HEIGHTS, ILLINOIS, HEREBY CERTIFY THAT THE IMPROVEMENTS DESCRIBED IN THIS PLAT AND THE PLANS AND SPECIFICATIONS THEREFORE MEET THE MINIMUM REQUIREMENTS OF SAID VILLAGE AND HAVE BEEN APPROVED BY ALL PUBLIC AUTHORITIES HAVING JURISDICTION THEREOF.
DATED AT ARLINGTON HEIGHTS, COOK COUNTY, ILLINOIS, THIS___ DAY OF_____, 20___.

VILLAGE ENGINEER

VILLAGE CLERK'S CERTIFICATE

STATE OF ILLINOIS)
)SS
COUNTY OF COOK)

I, _____ VILLAGE CLERK OF THE VILLAGE OF ARLINGTON HEIGHTS, ILLINOIS, HEREBY CERTIFY THAT THIS PLAT WAS PRESENTED TO AND BY RESOLUTION DULY APPROVED BY THE BOARD OF TRUSTEES OF SAID VILLAGE AT ITS MEETING HELD ON_____, 20____ AND THAT THE REQUIRED BOND OR OTHER GUARANTEE HAS BEEN POSTED FOR THE COMPLETION OF THE IMPROVEMENTS REQUIRED BY THE REGULATIONS OF SAID VILLAGE.

IN WITNESS WHEREOF I HAVE HERETO SET MY HAND AND SEAL OF THE VILLAGE OF

ARLINGTON HEIGHTS, ILLINOIS THIS ___ DAY OF _____, 20___.

VILLAGE CLERK

COUNTY CLERK'S CERTIFICATE

STATE OF ILLINOIS)
)SS
COUNTY OF COOK)

I,_____ COUNTY CLERK OF COOK COUNTY, ILLINOIS, DO HEREBY CERTIFY THAT THERE ARE NO DELINQUENT GENERAL TAXES, NO UNPAID FORFEITED TAXES, AND NO REDEEMABLE TAX SALES AGAINST ANY OF THE LAND INCLUDED IN THE ANNEXED PLAT.

I FURTHER CERTIFY THAT I HAVE RECEIVED ALL STATUTORY FEES IN CONNECTION WITH THE ANNEXED PLAT.

GIVEN UNDER MY HAND AND SEAL OF THE COUNTY CLERK, AT WHEATON, COOK COUNTY, ILLINOIS THIS___DAY OF_____, 20____.

COUNTY CLERK

COOK COUNTY RECORDER'S CERTIFICATE

STATE OF ILLINOIS)
)SS
COUNTY OF COOK)

THIS INSTRUMENT_____ WAS FILED FOR RECORD IN THE RECORDER'S OFFICE OF COOK COUNTY, ILLINOIS, AFORESAID ON THE _____DAY OF_____, 20____, AT _____ O'CLOCK_____M., AND WAS RECORDED IN BOOK_____ OF PLATS ON PAGE _____.

RECORDER

SEND TAX BILL TO :
CLIM DEVELOPMENT LLC
919 S QUINCY STREET
HINSDALE, IL 60521

~~STORMWATER DETENTION EASEMENT PROVISIONS~~

~~ALL EASEMENTS INDICATED AS STORMWATER DETENTION EASEMENTS ON THIS PLAT ARE RESERVED FOR AND GRANTED TO THE VILLAGE OF~~ ARLINGTON HEIGHTS FOR THE BENEFIT OF THE PUBLIC.

NO PERMANENT BUILDINGS OR OTHER OBSTRUCTIONS SHALL BE PLACED ON SAID EASEMENT BUT THE SAME MAY BE USED FOR PURPOSES THAT DO NOT ADVERSELY AFFECT THE STORAGE OR FREE FLOW OF STORMWATER AND THE OPERATION OF THE STORMWATER MANAGEMENT SYSTEM. THE OWNER SHALL BE RESPONSIBLE FOR MAINTAINING THE DRAINAGE PATHS AND STORMWATER DETENTION APPLICABLE TO HIS LOT AND SHALL NOT MODIFY GRADES, SLOPES, OR STORMWATER MANAGEMENT FACILITIES WITHOUT HAVING FIRST RECEIVED PRIOR WRITTEN APPROVAL OF THE VILLAGE OF ARLINGTON HEIGHTS.

IN THE EVENT THE OWNER FAILS TO PROPERLY MAINTAIN THE DRAINAGE OR STORMWATER DETENTION AREA EASEMENTS, THE VILLAGE OF ARLINGTON HEIGHTS AND ANY OTHER UNIT OF GOVERNMENT HAVING JURISDICTION OVER DRAINAGE ON THE SUBJECT PROPERTY AND ANY OWNER OF RECORD OF THE REAL ESTATE (OR PART THEREOF) SHALL UPON TEN (10) DAYS PRIOR WRITTEN NOTICE, HAVE THE RIGHT TO PERFORM, OR HAVE PERFORMED ON ITS OR THEIR BEHALF, ANY MAINTENANCE WORK TO OR UPON THE STORMWATER DETENTION AREA WHICH IS REASONABLY NECESSARY TO INSURE ADEQUATE STORMWATER STORAGE AND FREE FLOW OF STORM WATER THROUGH THE DETENTION EASEMENT AREA.

IN THE EVENT THAT THE VILLAGE OF ARLINGTON HEIGHTS OR ANY OTHER UNIT OF GOVERNMENT HAVING JURISDICTION OVER DRAINAGE ON THE SUBJECT PROPERTY OR ANY OWNER OF RECORD OF THE REAL ESTATE (OR PART THEREOF), SHALL BE REQUIRED TO PERFORM, OR HAVE PERFORMED ON ITS OR THEIR BEHALF, ANY MAINTENANCE WORK TO OR UPON THE DRAINAGE OR STORMWATER DETENTION AREA EASEMENT, THE EXPENSE THEREOF, INCLUDING ANY ADMINISTRATIVE COSTS, SHALL UPON RECORDATION OF A NOTICE OF LIEN WITHIN SIXTY (60) DAYS OF COMPLETION OF THE WORK, CONSTITUTE A LIEN AGAINST HIS LOT WHICH MAY BE FORECLOSED BY ANY ACTION BROUGHT BY OR ON BEHALF OF THE VILLAGE OF ARLINGTON HEIGHTS AND/OR OTHER UNIT OF GOVERNMENT HAVING ~~JURISDICTION OVER DRAINAGE ON THE SUBJECT PROPERTY AND/OR ANY OWNER OF RECORD OF THE REAL ESTATE (OR PART THEREOF).~~

DEED OF DEDICATION

STATE OF ILLINOIS)
)SS
COUNTY OF COOK)

WE, THE UNDERSIGNED, VITALIE CLIM, MANAGER OF CLIM DEVELOPMENT LLC, OWNER OF THE REAL ESTATE SHOWN AND DESCRIBED HEREIN, DO HEREBY LAY OFF, PLAT AND SUBDIVIDE SAID REAL ESTATE IN ACCORDANCE WITH THE WITHIN PLAT. THIS SUBDIVISION SHALL BE KNOWN AND DESIGNATED AS CHESTNUT WOODS, AN ADDITION TO THE VILLAGE OF ARLINGTON HEIGHTS, COOK COUNTY. ALL STREETS AND ALLEYS AND PUBLIC OPEN SPACES SHOWN AND NOT HERETOFORE DEDICATED ARE HEREBY DEDICATED TO THE PUBLIC. FRONT AND SIDE YARD BUILDING SETBACK LINES ARE ESTABLISHED AS SHOWN ON THIS PLAT, BETWEEN WHICH LINES AND THE PROPERTY LINES OF THE STREETS, THERE SHALL BE ERECTED OR MAINTAINED NO BUILDING OR STRUCTURE. THERE ARE STRIPS OF GROUND, 5 FEET IN WIDTH, AS SHOWN ON THE PLAT AND MARKED 'EASEMENT' RESERVED FOR THE USE OF PUBLIC UTILITIES FOR THE INSTALLATION OF WATER AND SEWER MAINS, POLES, DUCTS, LINES AND WIRES, SUBJECT AT ALL TIMES TO THE PROPER AUTHORITIES AND TO THE EASEMENT HEREIN RESERVED. NO PERMANENT OR OTHER STRUCTURES ARE TO BE ERECTED OR MAINTAINED UPON THESE STRIPS OF LAND, BUT OWNERS OF LOTS IN THIS SUBDIVISION SHALL TAKE THEIR TITLES SUBJECT TO THE RIGHTS OF THE PUBLIC UTILITIES, AND TO THE RIGHTS OF THE OWNERS OF OTHER LOTS IN THIS SUBDIVISION. ~~AT THE COMPLETION OF THE 18 MONTH MAINTENANCE PERIOD FOR THE SUBDIVISION'S PUBLIC IMPROVEMENTS AND AFTER ACCEPTANCE OF THE PUBLIC IMPROVEMENTS BY THE VILLAGE, THE OWNER SHALL DEED OUTLOT 1 TO THE VILLAGE TO BECOME A PUBLICLY OWNED AND MAINTAINED LOT FOR STORMWATER MANAGEMENT PURPOSES.~~ THE RIGHT TO ENFORCE THESE PROVISIONS BY INJUNCTION, TOGETHER WITH THE RIGHT TO CAUSE THE REMOVAL, BY DUE PROCESS OF LAW, OF ANY STRUCTURE OR PART THEREOF ERECTED OR MAINTAINED IN VIOLATION, IS HEREBY DEDICATED TO THE PUBLIC, AND RESERVED TO THE SEVERAL OWNERS OF THE SEVERAL LOTS IN THIS SUBDIVISION AND TO THEIR HEIRS AND ASSIGNS. CLIM DEVELOPMENT LLC, AN ILLINOIS LIMITED LIABILITY COMPANY,

BY: Clim manager Cl...Development
VITALIE CLIM, MANAGER

WITNESS OUR HANDS AND SEALS THIS 26th DAY OF February, 2026

STATE OF ILLINOIS)
)SS
COUNTY OF COOK)

BEFORE ME THE UNDERSIGNED NOTARY PUBLIC, IN AND FOR THE COUNTY AND STATE AFORESAID, PERSONALLY APPEARED VITALIE CLIM, AND EACH SEPARATELY AND SEVERALLY ACKNOWLEDGED THE EXECUTION OF THE FOREGOING INSTRUMENT AS HIS OR HER VOLUNTARY ACT AND DEED, FOR THE PURPOSES THEREIN EXPRESSED.

WITNESS OUR HANDS AND NOTARIAL SEAL THIS 26th DAY OF 20 Feb. 2026

Gayle L Glazer

GAYLE L GLAZER
OFFICIAL SEAL
Notary Public - State of Illinois
Commission No. 992695
My Commission Expires December 28, 2027

NOTARY PUBLIC

SURVEYOR AUTHORIZATION TO RECORD

I HEREBY DESIGNATE THE VILLAGE OF ARLINGTON HEIGHTS, AND/OR REPRESENTATIVES THEREOF, TO RECORD THIS PLAT, A TRUE COPY OF WHICH HAS BEEN RETAINED BY ME TO ASSURE NO CHANGES HAVE BEEN MADE TO SAID PLAT.

DATED THIS, 13th DAY OF NOVEMEBER, 2025, AT STREAMWOOD, COOK COUNTY, ILLINOIS.

KANTHAPHIXAY LAND SURVEYING
17 N. RIDGE COURT
STREAMWOOD, IL 60107

BY: RICHARD R. KANTHAPHIXAY

ILLINOIS PROFESSIONAL LAND SURVEYOR
RICHARD R. KANTHAPHIXAY LICENSE NO. 035.003807
LICENSE EXPIRES 11/30/2026

ILLINOIS REGISTERED LAND SURVEYOR CERTIFICATE

I, RICHARD R. KANTHAPHIXAY, hereby certify that I am an Illinois Registered Land Surveyor in compliance with the laws of the State of Illinois, and that this plat correctly represents a survey completed by me on November 12th, 2025; that all monuments and markers shown thereon actually exist, and that I have accurately shown the materials that they are made of.

Signature.

RICHARD R. KANTHAPHIXAY 3807 PROFESSIONAL LAND SURVEYOR STREAMWOOD ILLINOIS

Illinois Land Surveyor
No. 035.003807

DATE	
1	11/12/2025 ISSUED FOR DESIGN COORDINATION
2	02/11/2026 ISSUED FOR REVIEW
3	
4	
5	
6	

FINAL SUBDIVISION PLAT
1920 N. CHESTNUT AVENUE
ARLINGTON HEIGHTS, ILLINOIS

KANTHAPHIXAY
Land Surveying
17 N. Ridge Court, Streamwood IL 60107
Phone: (224) 425-0009
Cell: (630) 973-7491

Ordered By: CivLand, LLC
Field work done on 08-17-2024
Drawn By: RD

SHEET 2 OF 2 SHEETS

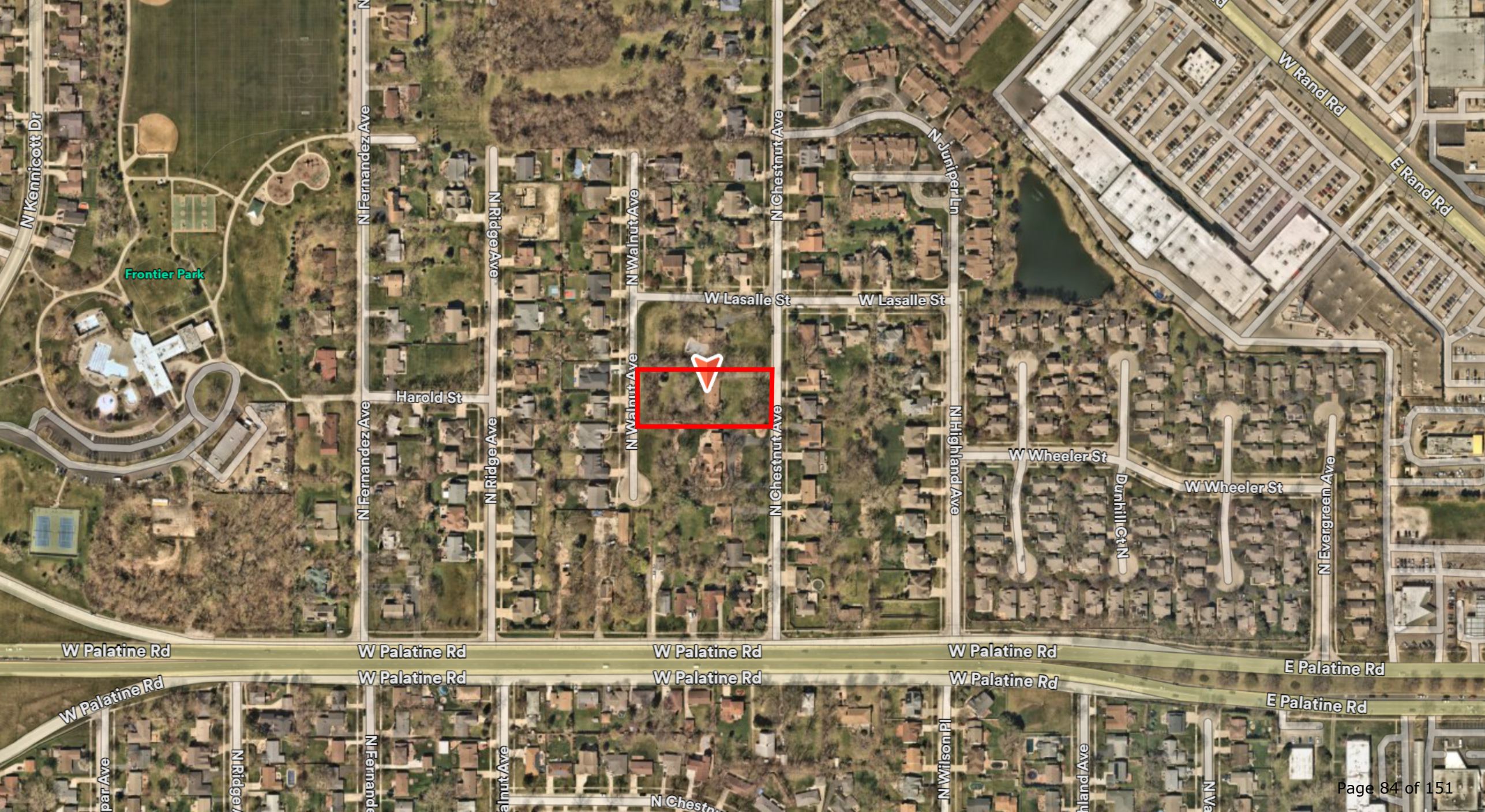
N Kennicott Dr
Frontier Park
N Fernandez Ave
N Ridge Ave
N Walnut Ave
N Chestnut Ave
N Juniper Ln
W Rand Rd
E Rand Rd
W Lasalle St
W Lasalle St
Harold St
N Highland Ave
W Wheeler St
W Wheeler St
Dunhill Ct N
N Evergreen Ave
W Palatine Rd
W Palatine Rd
W Palatine Rd
W Palatine Rd
E Palatine Rd
W Palatine Rd
W Palatine Rd
W Palatine Rd
W Palatine Rd
E Palatine Rd
N Wilson Pl

PLAT OF SURVEY

BY

JOHN M. HENRIKSEN

415 E. GOLF ROAD - SUITE 103 ARLINGTON HEIGHTS, ILLINOIS 60005
TEL. 224-875-7633 FAX. 224-875-7634
WWW.HENRIKSENSURVEY.COM

LEGAL DESCRIPTION :

THE SOUTH 150 FEET OF THE NORTH 300 FEET OF THE SOUTH 900 FEET OF THE EAST 323.40 FEET OF THE WEST 718 FEET OF THAT PART OF THE EAST 1/2 OF THE SOUTHEAST 1/4 OF SECTION 18, TOWNSHIP 42 NORTH, RANGE 11 EAST OF THE THIRD PRINCIPAL MERIDIAN, LYING NORTH OF THE CENTERLINE OF PALATINE ROAD, IN COOK COUNTY, ILLINOIS.

COMMON KNOWN AS : 1920 N. CHESTNUT AVENUE, ARLINGTON HEIGHTS, ILLINOIS 60004

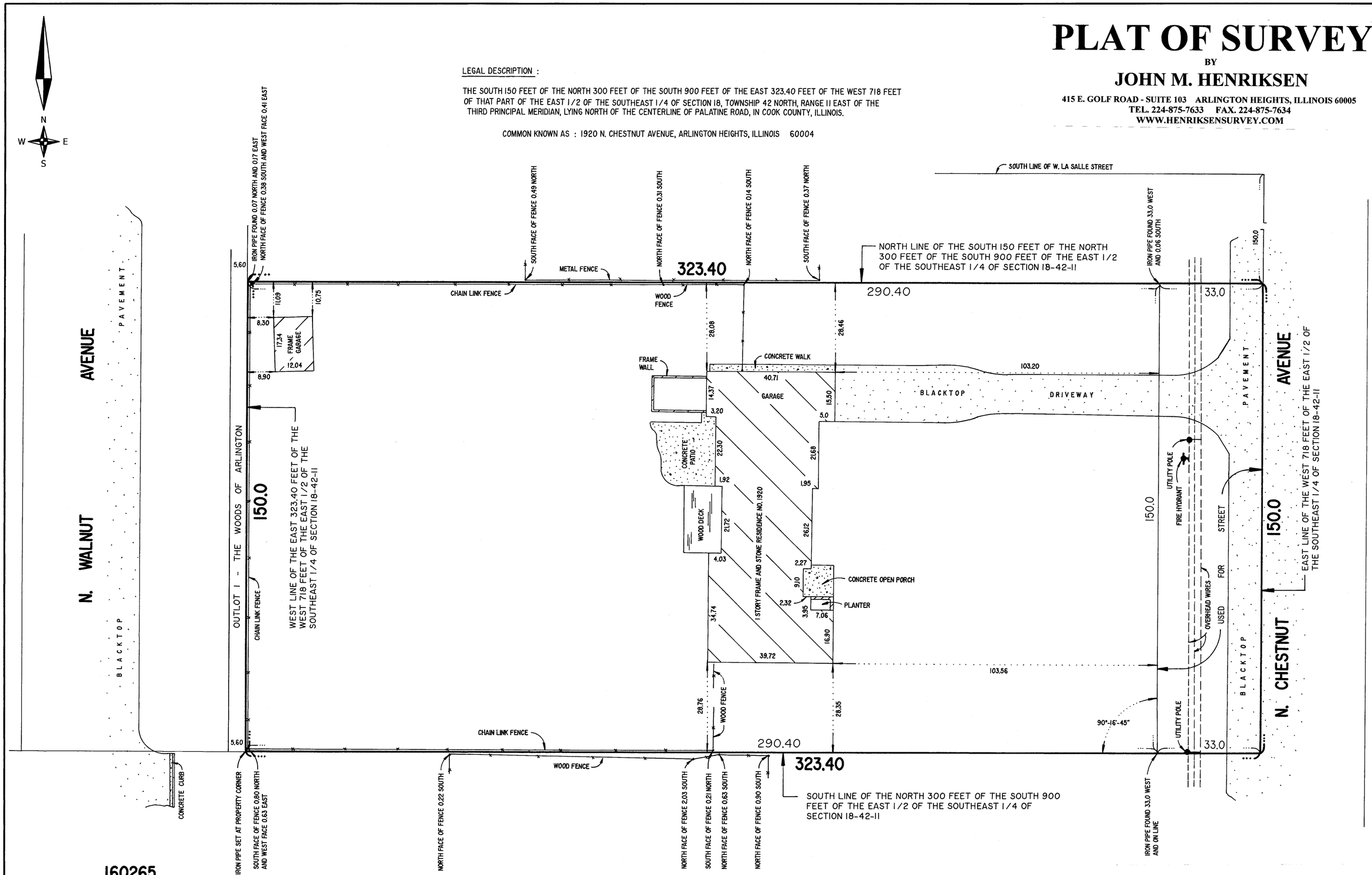

ORDER NUMBER: 160265

SCALE: 1 INCH = 15 FEET

ORDERED BY: KIM MARKSHAUSEN

BUILDING LINES AND EASEMENTS, IF ANY, SHOWN HEREON ARE BUILDING LINES AND EASEMENTS AS SHOWN ON THE RECORDED SUBDIVISION PLAT. CONSULT LOCAL AUTHORITIES FOR BUILDING LINES ESTABLISHED BY LOCAL ORDINANCES.

PLEASE CHECK LEGAL DESCRIPTION WITH DEED.

COMPARE ALL POINTS BEFORE BUILDING AND REPORT ANY DISCREPANCY IMMEDIATELY.

DIMENSIONS ARE NOT TO BE ASSUMED FROM SCALING.

FRACTIONAL INCH EQUIVALENTS OF HUNDREDTHS OF A FOOT

0.01=1/8"	0.25=3"
0.02=1/4"	0.33=4"
0.03=3/8"	0.37=4-1/2"
0.04=1/2"	0.38=4-1/2"
0.05=5/8"	0.42=5"
0.06=3/4"	0.50=6"
0.07=7/8"	0.58=7"
0.08=1"	0.62=7-1/2"
0.09=1-1/8"	0.63=7-1/2"
0.10=1-1/4"	0.67=8"
0.11=1-3/8"	0.75=9"
0.12=1-1/2"	0.83=10"
0.13=1-1/2"	0.87=10-1/2"
0.14=1-5/8"	0.88=10-1/2"
0.15=1-3/4"	0.92=11"
0.16=1-7/8"	1.00=12"
0.17=2"	

THIS PROFESSIONAL SERVICE CONFORMS TO THE CURRENT ILLINOIS MINIMUM STANDARDS FOR A BOUNDARY SURVEY.

STATE OF ILLINOIS}
COUNTY OF COOK}

I, JOHN M. HENRIKSEN, AN ILLINOIS PROFESSIONAL LAND SURVEYOR, DO HEREBY CERTIFY THAT I HAVE SURVEYED THE ABOVE DESCRIBED PROPERTY AND THAT THE PLAT HEREON DRAWN IS A CORRECT REPRESENTATION OF SAID SURVEY. DIMENSIONS ARE SHOWN IN FEET DECIMAL PARTS THEREOF.

ARLINGTON HEIGHTS, ILLINOIS SEPTEMBER 26, 2016

ILLINOIS PROFESSIONAL LAND SURVEYOR NO. 2668
LICENSE EXPIRES NOVEMBER 30, 2016.

VILLAGE OF ARLINGTON HEIGHTS

RESOLUTION NO. R2025-150

A RESOLUTION APPROVING A PRELIMINARY PLAT
(1920 N. Chestnut Avenue)

WHEREAS, Clim Development, LLC (*"Owner"*) is the owner of that certain property commonly known as 1920 N. Chestnut Avenue, and legally described in Exhibit A attached to and, by this reference, made a part of this Resolution (*"Property"*); and

WHEREAS, the Owner desires to subdivide the Property into three residential lots and one dedicated on-site stormwater detention lot, as depicted on the Preliminary Plat of Chestnut Woods Subdivision, prepared by Kanthaphixay Land Surveying, consisting of one sheet, with a last revision date of June 10, 2025, a copy of which is attached to and, by this reference, made a part of this Resolution as Exhibit B (*"Preliminary Plat"*); and

WHEREAS, pursuant to Section 29-201 of the "Municipal Code of Arlington Heights, Illinois, 1995," as amended (*"Village Code"*), the Owner has applied for approval of the Preliminary Plat; and

WHEREAS, pursuant to notice duly published in the *Daily Herald* on September 9, 2025, the Plan Commission of the Village of Arlington Heights (*"Plan Commission"*) conducted a public hearing on September 24, 2025, concerning approval of the Preliminary Plat; and

WHEREAS, at the conclusion of the public hearing, the Plan Commission made findings and recommended that the President and Board of Trustees approve the Preliminary Plat; and

WHEREAS, having considered the findings and recommendations of the Plan Commission, the President and Board of Trustees have found and determined that it will serve and be in the best interest of the Village and its residents to approve the Preliminary Plat;

NOW, THEREFORE, BE IT RESOLVED BY THE PRESIDENT AND BOARD OF TRUSTEES OF THE VILLAGE OF ARLINGTON HEIGHTS, COOK COUNTY, ILLINOIS, as follows:

SECTION 1. RECITALS. The facts and statements contained in the preamble to this Resolution are found to be true and correct and are hereby adopted as part of this Resolution.

SECTION 2. APPROVAL OF PRELIMINARY PLAT. The Preliminary Plat for the Property is hereby approved pursuant to Section 29-203 of the Village Code and the home rule powers of the Village.

SECTION 3. SUBMISSION OF FINAL PLAT. Pursuant to and in accordance with Section 29-204 of the Village Code, the adoption of this Resolution authorizes the Owner to submit a final plat of subdivision for the Property ("*Final Plat*") to the Board of Trustees. The Final Plat must comply with the requirements of the Village Code and must be submitted by the Owner for review and approval by the Village no later than 12 months after the effective date of this Resolution, or such extended date as may be approved by the Board of Trustees, in accordance with and pursuant to Section 29-204.c of the Village Code.

SECTION 4. EFFECT OF APPROVALS. Pursuant to Section 29-204 of the Village Code, the approval of the Preliminary Plat for the Property, as set forth in Section 2 of this Resolution, is not to be deemed or interpreted as authorizing or entitling the Owner to approval of a Final Plat or to any other

approval, or to the issuance of any permit, until after all of the standards and procedures for such other approvals or permits have been satisfied. Further, the Board of Trustees will have no obligation to consider or approve a Final Plat unless and until the Owner complies with the applicable procedures for review and approval of a Final Plat for the Property, as set forth in the Village Code.

SECTION 5. EFFECTIVE DATE. This Resolution will be in full force and effect from and after its passage and approval as provided by law.

AYES: Schwingbeck, Santa Maria, Bertucci, Gilbert, Zyck, Dunnington, Manganaro, Tinaglia
NAYS: None
Absent: LaBedz

PASSED AND APPROVED THIS 1st day of December, 2025

Village President

ATTEST:

Magdalena Mattia
Village Clerk

EXHIBIT A

LEGAL DESCRIPTION OF THE PROPERTY

THE SOUTH 150 FEET OF THE NORTH 300 FEET OF THE SOUTH 900 FEET OF THE EAST 323.40 FEET OF THE WEST 718 FEET OF THAT PART OF THE EAST ½ OF THE SOUTHEAST ¼ OF SECTION 18, TOWNSHIP 42 NORTH, RANGE 11 EAST OF THE THIRD PRINCIPAL MERIDIAN, LYING NORTH OF THE CENTERLINE OF PALATINE ROAD, IN COOK COUNTY, ILLINOIS.

AND

THE SOUTH 150.00 FEET OF THE OUT LOT 1, IN THE WOODS OF ARLINGTON, BEING A SUBDIVISION OF PART OF THE EAST ½ OF THE SOUTHEAST ¼ OF SECTION 18, TOWNSHIP 42 NORTH, RANGE 11 EAST OF THE THIRD PRINCIPAL MERIDIAN, IN COOK COUNTY, ILLINOIS.

Commonly known as: 1920 N. Chestnut Avenue, Arlington Heights, Illinois

PINs: 03-18-401-086-0000
03-18-401-173-0000

EXHIBIT B

PRELIMINARY PLAT

PRELIMINARY PLAT OF
CHESTNUT WOODS SUBDIVISION

AREA SUMMARY:
LOT 1 = 13,320 SQ. FT. OR 0.306 ACRE
LOT 2 = 8,880 SQ. FT. OR 0.203 ACRE
LOT 3 = 11,100 SQ. FT. OR 0.255 ACRE
LOT 4= 11,100 SQ. FT. OR 0.255 ACRE
TOTAL AREA = 44,400 SQ.FT. OR 1.019 ACRE

EASEMENT TO BE GRANTED AREA SUMMARY:
LOT 1 = 1,880 SQ. FT. OR 0.043 ACRE
LOT 3 = 1,805 SQ. FT. OR 0.041 ACRE
LOT 4= 1,805 SQ. FT. OR 0.041 ACRE
TOTAL AREA = 5,490 SQ.FT. OR 0.126 ACRE

OF THE SOUTH 150 FEET OF THE NORTH 190 FEET OF THE SOUTH 900 FEET OF THE EAST 323.40 FEET OF THE WEST 748 FEET OF THAT PART OF THE EAST 1/2 OF THE SOUTHEAST 1/4 OF SECTION 13, TOWNSHIP 42 NORTH, RANGE 11 EAST OF THE THIRD PRINCIPAL MERIDIAN , LYING NORTH OF THE CENTERLINE OF PALATINE ROAD IN COOK COUNTY, ILLINOIS.

KNOWN AS: 1920 N. CHESTNUT AVENUE, ARLINGTON HEIGHTS, ILLINOIS 60004
COOK COUNTY PERMANENT IDENTIFICATION NUMBER 03 - 13 - 401 - 006 - 0000

OF THE SOUTH 150.00 FEET OF LOT LOT 1 IN THE WOODS OF ARLINGTON BEING A SUBDIVISION OF PART OF THE EAST 1/2 OF THE SOUTHEAST 1/4 OF SECTION 13, TOWNSHIP 42 NORTH, RANGE 11 EAST OF THE THIRD PRINCIPAL MERIDIAN, IN COOK COUNTY, ILLINOIS

KNOWN AS: 20748 N. WALNUT AVE, ARLINGTON HEIGHTS, IL 60004
COOK COUNTY PERMANENT IDENTIFICATION NUMBER 03 - 13 - 401 - 173 - 0000

OWNER(S) INFORMATION
1920 N CHESTNUT AVE -Vitale Clim (Owner: 379 W County Line Rd , Barrington, IL 60010)
2000 N CHESTNUT AVE -JOHN C FEDERICI (NORTH ADJACENT OWNER)
1916 N CHESTNUT AVE -DONALD C SINCLAIR (SOUTH ADJACENT OWNER)
1912 N CHESTNUT AVE -MICHAEL J SARGENT
1909 N CHESTNUT AVE -LUIS R SOLANO & KIMBER
1911 N CHESTNUT AVE -PHILIP S FERRITTA & FR
1915 N CHESTNUT AVE -MANS AGRAHA
1919 N CHESTNUT AVE -T CARTER
1923 N CHESTNUT AVE -LAURA PAXSON BANNON TR
2003 N CHESTNUT AVE -HPA ILL I LLC
2007 N CHESTNUT AVE -JACLYN STILLMAKER
1950 N WALNUT AVE -NEIL S ROSENBLUM & MAR
1960 N WALNUT AVE -SHRIRANG A MAHAJAN
1970 N WALNUT AVE -RICHARD OBERMAN & DINA
2010 N WALNUT AVE -THE STEVEN R MARAK FAM
2020 N WALNUT AVE -JAY A DEHART
2030 N WALNUT AVE -GERALD W HEINSOTH
2040 N WALNUT AVE -SCOTT & COLLEEN FABER
2050 N WALNUT AVE -ANTHONY C & GIOVANNA G
2080 N WALNUT AVE -PAUL HEINRICH
400 W PALATINE RD -NOSHAD NASEER CHAUDHRY (S. ADJACENT OWNER)
1985 N WALNUT AVE -N/A (S. ADJACENT OWNER)
444 W LASALLE ST -WAYMAN FAMILY TRUST
404 W LASALLE ST -ARTHUR & SHEILA BRUNETTI
270 W LASALLE ST -PATRICK F WADLEY
307 W LASALLE ST -REED & JANET HANSEN
303 W LASALLE ST -MICHAEL DINAGGIO
209 W LASALLE ST -RANDY HARRIS
2041 N RIDGE AVE -SZNAJDER & LESKOWSKA
2031 N RIDGE AVE -TRUSTEE THE STEVEN M G
2021 N RIDGE AVE -KATHLEEN M PONCE
2011 N RIDGE AVE -LUCIA M MORAN
1927 N RIDGE AVE -VIKTOR MOSKALYUK
1923 N RIDGE AVE -KISHORE VARMA

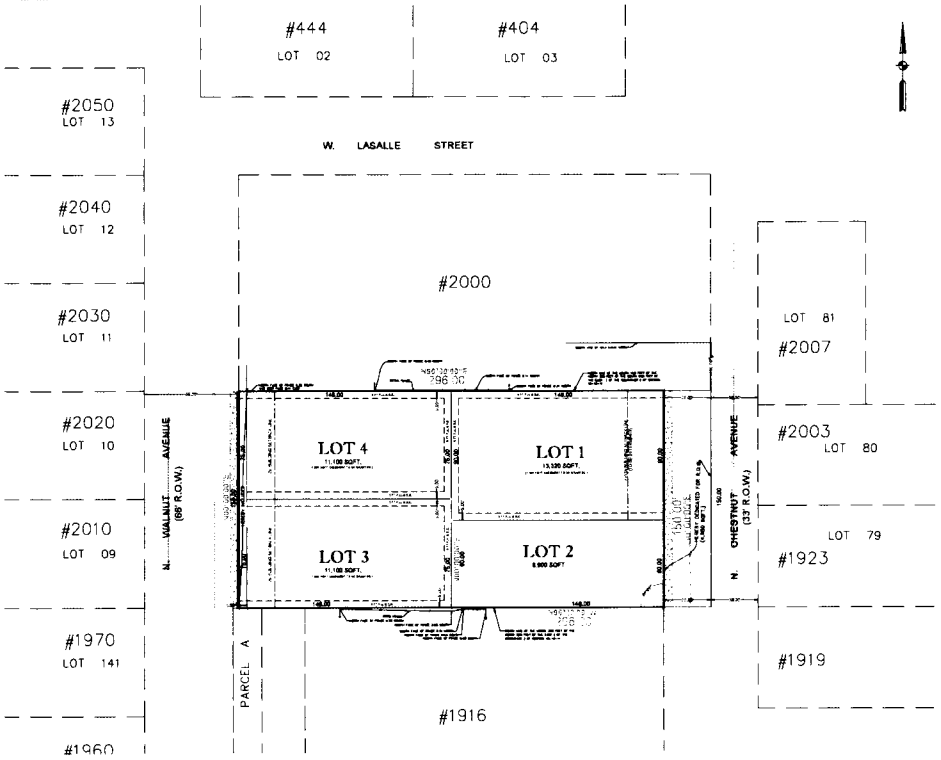

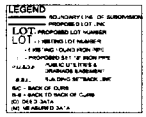

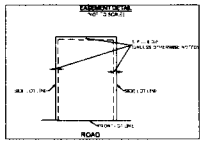

STATE OF ILLINOIS }ss
COUNTY OF COOK }

I, RICHARD R. KANTHAPHIXAY , a Illinois Professional land Surveyor, hereby certify that a survey has been made, at and under my direction, of the property described above, and that the survey hereon drawn is a correct representation of said survey and conforms to the current Illinois minimum standards for a boundary survey

Streamwood, Illinois, JUNE 08, A.D. 2025

By _____
Illinois Professional Land Surveyor
Certificate No 3807
Expiration date 11-30-2026

RICHARD R. KANTHAPHIXAY 3807 PROFESSIONAL LAND SURVEYOR STREAMWOOD ILLINOIS

NO	DATE	ISSUED FOR REVISION
1	09/17/2024	1ST SUBMITTAL TOWNSHIP LOG
2	10/17/2024	ISSUED FOR REVISION #2
3	04/10/2025	ISSUED FOR REVISION #3
4	7/08/2025	ISSUED FOR REVISION #3
5	08/07/2025	1ST SUBMITTAL TOWNSHIP LOG REVISION #4
6	09/12/2025	ISSUED FOR REVISION #5

PRELIMINARY SUBDIVISION PLAT
1920 N. CHESTNUT AVENUE
ARLINGTON HEIGHTS, ILLINOIS

KANTHAPHIXAY
Land Surveying
17 N. Ridge Court, Streamwood IL 60107
Phone: (224) 425-0009
Cell: (630) 973-7491

Ordered By: Cortland, LLC
Field work done on 08-17-2024
Drawn By: RRK

VILLAGE OF
ARLINGTON HEIGHTS
INC. 1887

Village Board of Trustees
12/1/2025

Item: Resolution Approving a Preliminary Plat of Subdivision for Chestnut Woods at 1920 N. Chestnut Ave.

Department: Planning & Community Development

Item Description:
At the October 20, 2025 Village Board meeting, a request for a Preliminary Plat of Subdivision to create three residential lots and one dedicated one-site stormwater detention lot, was discussed and approved. The Resolution setting forth the provisions and conditions of approval is attached.

Recommendation
Adoption of a Resolution granting a Preliminary Plat of Subdivision for Chestnut Woods at 1920 N. Chestnut Ave.

ATTACHMENTS:
1. AH Resolution Approving Chestnut Woods Preliminary Plat

VILLAGE OF ARLINGTON HEIGHTS
INC. 1887

Village Board of Trustees
5/4/2026

Item: Appointment of Jeff Thiel to the Arlington Economic Alliance, term ending April 30, 2029
Department: Integrated Services

Item Description:
Appointment of Jeff Thiel to the Arlington Economic Alliance, term ending April 30, 2029

ATTACHMENTS:
None

VILLAGE OF ARLINGTON HEIGHTS
INC. 1887

Village Board of Trustees
5/4/2026

Item: Appointment of Charles Wilk to the Environmental Commission, term ending April 30, 2027

Department: Integrated Services

Item Description:
Appointment of Charles Wilk to the Environmental Commission, term ending April 30, 2027

ATTACHMENTS:
None

VILLAGE OF ARLINGTON HEIGHTS
INC. 1887

Village Board of Trustees
5/4/2026

Item: Appointment of Annabelle Finn to the Environmental Commission, term ending April 30, 2027

Department: Integrated Services

Item Description:
Appointment of Annabelle Finn to the Environmental Commission, term ending April 30, 2027

ATTACHMENTS:
None

VILLAGE OF ARLINGTON HEIGHTS
INC. 1887

Village Board of Trustees
5/4/2026

Item: 1903 E. Euclid Ave. - First United Methodist Church Arlington Heights, Approval of Variations, PC#25-025
Department: Planning & Community Development

Item Description:
Requested Action:
Variations from Chapter 28, Section 5.1-3.3(b) to allow a side setback of 30.5-feet where 43.2-feet is required; Section 10.2-12.4 to allow parking wheel stops where a curb is required in accordance with prescribed engineering standards; and Section 10.4-4 to allow 235 parking spaces where 320 parking spaces are required. Staff is requesting final action on the approval of these variations at this meeting. The approving Ordinance for the requested relief is attached.

Recommendation:
The Plan Commission reviewed the proposed parking lot reconfiguration and variances to reduce required side yard setback for the property from 43.2-feet to 30.5-feet, waive the requirement for curbing of the parking lot and to reduce the required off-street parking from 320 spaces to 235 spaces at 1903 E. Euclid Avenue, and recommends **APPROVAL**of the application subject to the following conditions:

1. The new green space adjacent to the parking lot shall be graded to direct runoff to the south such that the runoff is directed to the existing detention basin. The petitioner shall provide detailed grading plans with the Building Permit to demonstrate compliance with this condition.
2. Future expansions of the place of worship at this location will require re-evaluation of the required parking spaces.

3. The petitioner shall comply with all Federal, State, and Village Codes, Regulations, and Policies.

Suggested Motion:
Trustee _____moved to approve the final documents granting the zoning relief for consideration at this Board meeting for PC25-025, variances from Chapter 28, Sections 5.1-3.3(b), Section 10.2-12.4, and Section 10.4-4, and subject to the recommended conditions, all as set

forth in the agenda materials for tonight's Board Meeting.
Trustee _____ seconded.

ATTACHMENTS:

1. Ordinance Approving Variations for First United Methodist Church
2. Staff Report - 1903 E. Euclid Ave., First United Methodist Church
3. 8-13-25 CPRC Minutes
4. 4.22.26 Plan Commission Draft Minutes
5. Exhibit A - Aerial
6. Exhibit B - Plat of Survey
7. Exhibit C - Project Narrative
8. Exhibit D - Variance Response
9. Engineering Plans
10. Parking Study
11. Suggested Motion - 1903 E Euclid Ave - First United Methodist Church

Prepared by and return to:
Village of Arlington Heights
33 S. Arlington Heights Road
Arlington Heights, Illinois 60005
Attention: Village Clerk

THIS SPACE FOR RECORDERS USE ONLY

VILLAGE OF ARLINGTON HEIGHTS

ORDINANCE NO. 2026-_____

AN ORDINANCE GRANTING VARIATIONS FOR
FIRST UNITED METHODIST CHURCH ARLINGTON HEIGHTS
(1903 E. Euclid Avenue)

ADOPTED BY THE
PRESIDENT AND BOARD OF TRUSTEES
OF THE VILLAGE OF ARLINGTON HEIGHTS
THIS ____ DAY OF _____, 2026.

AN ORDINANCE GRANTING VARIATIONS FOR
FIRST UNITED METHODIST CHURCH ARLINGTON HEIGHTS
(1903 E. Euclid Avenue)

WHEREAS, the First United Methodist Church Arlington Heights (*"Owner"*) is the record title owner of that certain parcel of real property situated within the Village's R-3 One Family Dwelling District (*"R-3 District*"), located at the address commonly known as 1903 E. Euclid Avenue, and legally described in Exhibit A attached to and, by this reference, made a part of this Ordinance (*"Property"*); and

WHEREAS, the Owner desires to reconfigure the existing parking lot on the Property to include 235 off-street parking spaces and landscaping (*"Proposed Improvements"*); and

WHEREAS, pursuant to Section 5.1-3.3(b) of the "The 2002 Comprehensive Amendment of the Zoning Code of the Village of Arlington Heights," as amended (*"Zoning Code"*), the minimum side yard setback for a lot in the R-3 District is 10 percent of the lot's width; and

WHEREAS, pursuant to Section 10.2-12.4 of the Zoning Code, the perimeter of all parking areas providing space for five or more vehicles must be protected in accordance with prescribed engineering standards; and

WHEREAS, pursuant to Section 10.4-4 of the Zoning Code, 320 off-street parking spaces are required on the Property; and

WHEREAS, pursuant to Section 12 of the Zoning Code, in order to allow the Proposed Improvements of the Property, the Owner filed an application for approval of: (i) a variation from Section 5.1-3.3(b) of the Zoning Code to reduce the minimum required side yard setback of the Property, from 43.2 feet to 30.5 feet; (ii) a variation from Section 10.2-12.4 of the Zoning Code to allow parking wheel stops where a curb is required at the perimeter of parking areas providing space for five or more vehicles; and (iii) a variation from Section 10.4-4 of the Zoning Code to reduce the required amount of off-street parking spaces on the Property, from 320 spaces to 235 spaces (collectively, the *"Requested Relief"*); and

WHEREAS, a public hearing of the Plan Commission of the Village to consider approval of the Requested Relief was duly advertised in the Daily Herald on April 7, 2026, and held on April 20, 2026; and

WHEREAS, on April 20, 2026, the Plan Commission made findings and recommendations in support of the Requested Relief, subject to specified conditions; and

WHEREAS, the Village President and Board of Trustees has determined that the Requested Relief complies with the required standards for variations as set forth in the Zoning Code; and

WHEREAS, consistent with the Plan Commission recommendation, the President and Board of Trustees have determined that it will serve and be in the best interests of the Village and its residents to approve the Requested Relief, in accordance with, and subject to, the conditions, restrictions, and provisions of this Ordinance;

NOW, THEREFORE, BE IT ORDAINED BY THE PRESIDENT AND BOARD OF TRUSTEES OF THE VILLAGE OF ARLINGTON HEIGHTS:

SECTION 1. RECITALS. The facts and statements contained in the preamble to this Ordinance are found to be true and correct and are hereby adopted as part of this Ordinance.

SECTION 2. GRANT OF VARIATIONS. Subject to, and contingent upon, the conditions, restrictions, and provisions set forth in Section 3 of this Ordinance, and in accordance with, and pursuant to, Section 12 of the Zoning Code and the home rule powers of the Village, the Village hereby grants the Owner the following variations:

A. A variation from Section 5.1-3.3(b) of the Zoning Code to reduce the minimum side yard setback of the Property, from 43.2 feet to 30.5 feet;

B. A variation from Section 10.2-12.4 of the Zoning Code to allow parking wheel stops where a curb is required at the perimeter of parking areas providing space for five or more vehicles; and

C. A variation from Section 10.4-4 of the Zoning Code to reduce the required amount of off-street parking spaces on the Property, from 320 spaces to 235 spaces.

SECTION 3. CONDITIONS. Notwithstanding any use or development right that may be applicable or available pursuant to the provisions of the Zoning Code, the approvals granted pursuant to Section 2 of this Ordinance are hereby expressly subject to, and contingent upon, the development, use, and maintenance of the Property in compliance with each and all of the following conditions:

A. Compliance with Regulations. Except to the extent specifically provided otherwise in this Ordinance, the development, use, operation, and maintenance of the Property and the proposed improvements must comply at all times with all applicable all applicable federal, State, and Village statutes, codes, ordinances, and regulations, as the same have been or may be amended from time to time.

B. Compliance with Plans. Except for minor changes and site work approved by the Village Director of Building & Life Safety (for matters within their permitting authority) in accordance with all applicable Village standards, the development, use, operation, and maintenance of the proposed improvements and of the Property must substantially comply with the Engineering Plans, prepared by Gewalt Hamilton Associates, Inc., and consisting of eight sheets, with a last revision date of March 6, 2026, a copy of which is attached to and, by this reference, made a part of this Ordinance as Exhibit B.

C. Runoff and Grading. The Owner must grade the new green space adjacent to the parking lot on the Property so that runoff is directed south to the existing detention basin. The Owner must provide the Village with a detailed grading plan with its building permit to demonstrate compliance with this condition.

D. Future Expansions. Any future expansions of the place of worship use on the Property will require reevaluation of the required off-street parking spaces.

SECTION 4. RECORDATION; BINDING EFFECT. A copy of this Ordinance will be recorded with the Cook County Clerk Recordings Division. This Ordinance and the privileges, obligations, and provisions contained herein will inure solely to the benefit of, and be binding upon, the Owner and each of his heirs, representatives, successors, and assigns, including, without limitation, subsequent owners or lessees of the Property.

SECTION 5. FAILURE TO COMPLY WITH CONDITIONS. Upon the failure or refusal of the Owner to comply with any or all of the conditions, restrictions, or provisions of this Ordinance, in addition to all other remedies available to the Village, the approvals granted in Section 2 of this Ordinance will, at the sole discretion of the Village President and Board of Trustees, by ordinance duly adopted, be revoked and become null and void; provided, however, that the Village President and Board of Trustees

may not so revoke the approvals granted in Section 2 unless it first provides the Owner with two months advance written notice of the reasons for revocation and an opportunity to be heard at a regular meeting of the Village President and Board of Trustees. In the event of revocation, the development and use of the Property will be governed solely by the regulations of the R-3 District and the applicable provisions of the Zoning Code, as the same may, from time to time, be amended. Further, in the event of such revocation, the Village Manager and Village Attorney are hereby authorized and directed to bring such enforcement action as may be appropriate under the circumstances.

SECTION 6. AMENDMENTS. Any amendments to the approvals granted in Section 2 of this Ordinance that may be requested by the Owner after the effective date of this Ordinance may be granted only pursuant to the procedures, and subject to the standards and limitations, provided in the Zoning Code.

SECTION 7. SEVERABILITY. If any provision of this Ordinance or part thereof is held invalid by a court of competent jurisdiction, the remaining provisions of this Ordinance will remain in full force and effect, and will be interpreted, applied, and enforced so as to achieve, as near as may be, the purpose and intent of this Ordinance to the greatest extent permitted by applicable law.

SECTION 8. EFFECTIVE DATE.

A. This Ordinance will be effective only upon the occurrence of all of the following events:

1. Passage by the Village President and Board of Trustees in the manner required by law;

2. Publication in pamphlet form in the manner required by law;

3. Recordation of this Ordinance, together with such exhibits as the Village Clerk deems appropriate for recordation, with the office of the Recorder of Cook County; and

4. The filing by the Owner with the Village Clerk of an Unconditional Agreement and Consent, in the form of Exhibit C attached to and, by this reference, made a part of this Ordinance, to accept and abide by each and all of the terms, conditions, and limitations set forth in this Ordinance and to indemnify the Village for any claims that may arise in connection with the approvals of this Ordinance; and

B. In the event the Owner does not file a fully executed copy of the Unconditional Agreement and Consent, as required by Section 8.A.4 of this Ordinance, within 30 days after the date of final passage of this Ordinance, the Village President and Board of Trustees will have the right, in its sole discretion, to declare this Ordinance null and void and of no force or effect.

[SIGNATURE PAGE FOLLOWS]

AYES:

NAYS:

PASSED AND APPROVED THIS ___ day of _____, 2026

_____
Village President

ATTEST:

_____
Village Clerk

EXHIBIT A

Legal Description of the Property

PARCEL 1: THE WEST 125 FEET OF THE NORTH 2 ACRES OF THE FOLLOWING DESCRIBED TRACT OF LAND: THE NORTHEAST QUARTER (EXCEPT THE EAST 30 ACRES THEREOF) OF THE SOUTHWEST ¼ OF SECTION 28, TOWNSHIP 42 NORTH, RANGE 11, EAST OF THE THIRD PRINCIPAL MERIDIAN, EXCEPT THE WEST 33 FEET THEREOF TAKEN FOR STREET.
PARCEL 2: THE NORTH 485 FEET OF THE WEST 10 ACRES OF THE EAST 30 ACRES OF THE NORTHEAST ¼ OF THE SOUTHWEST ¼ OF SECTION 28, TOWNSHIP 42 NORTH, RANGE 11, EAST OF THE THIRD PRINCIPAL MERIDIAN, EXCEPT THE EAST 33 FEET THEREOF TAKEN FOR STREET.
PARCEL 3: THE NORTH 485 FEET (EXCEPT THE NORTH 2 ACRES) OF THE FOLLOWING DESCRIBED TRACT OF LAND: THE NORTHEAST ¼ (EXCEPT THE EAST 30 ACRES THEREOF) OF THE SOUTHWEST ¼ OF SECTION 28, TOWNSHIP 42 NORTH, RANGE 11, EAST OF THE THIRD PRINCIPAL MERIDIAN, EXCEPT THE WEST 33 FEET THEREOF TAKEN FOR STREET.
PARCEL 4: THE NORTHEAST ¼ (EXCEPT THE EAST 20 ACRES THEREOF) OF THE SOUTHWEST ¼ AND (EXCEPT THE NORTH 485 FEET THEREOF) OF SECTION 28, TOWNSHIP 42 NORTH, RANGE 11, EAST OF THE THIRD PRINCIPAL MERIDIAN, EXCEPT THE WEST 33 FEET, EXCEPT THE SOUTH 33 FEET AND EXCEPT THE EAST 33 FEET THEREOF TAKEN FOR STREETS. EXCEPTING FROM SAID TRACT THE SOUTH 627 FEET THEREOF).
PARCEL 5: THE NORTH 2 ACRES EXCEPT THE WEST 125 FEET OF SAID NORTH 2 ACRES OF THE FOLLOWING DESCRIBED TRACT OF LAND: THE NORTHEAST ¼ (EXCEPT THE EAST 30 ACRES THEREOF) OF THE SOUTHWEST ¼ OF SECTION 28, TOWNSHIP 42 NORTH, RANGE 11, EAST OF THE THIRD PRINCIPAL MERIDIAN, EXCEPT THE WEST 33 FEET THEREOF TAKEN FOR STREET.

Commonly known as: 1903 E. Euclid Avenue, Arlington Heights, Illinois

P.I.N.: 03-28-301-021-0000

EXHIBIT B

Engineering Plans

ENGINEERING PLANS FOR

PARKING LOT RENOVATIONS
FIRST UNITED METHODIST CHURCH OF ARLINGTON HEIGHTS

1903 E EUCLID AVENUE
ARLINGTON HEIGHTS, ILLINOIS 60004

STANDARD SYMBOLS

FEATURE	EXISTING	PROPOSED
BUFFALO BOX		
BUSH/SHRUB		
CATCH BASIN		
CLEANOUT		
COMBINE SEWER LINE		
CONTOUR	708	708
CULVERT		
DITCH/SWALE		
ELECTRIC LINE	E	E
ELECTRIC MANHOLE		
FENCE	X X X X	X X X X
FIRE HYDRANT		
FLARED END SECTION		
GAS LINE	G	G
GAS MANHOLE		
GAS VALVE		
INLET		
LIGHT POLE		
OVERHEAD WIRES	A	A
POWER POLE		
R.O.W LINE		
R.O.W MARKER		
SANITARY FORCEMAIN LINE		
SANITARY SEWER LINE		
SANITARY SEWER MANHOLE		
SIGN		
SPOT ELEVATION	×850.00	×850.0
STORM SEWER LINE		
STORM SEWER MANHOLE		
TELEPHONE LINE	T	T
TELEPHONE MANHOLE		
TELEPHONE BOX/PEDESTAL		
TREE-CONIFEROUS (SIZE/TAG#)	345	345
TREE-DECIDUOUS (SIZE/TAG#)	12"	12"
VALVE BOX		
VALVE VAULT		
WATER VALVE		
WATERMAIN LINE	W	W

EXISTING UTILITIES: WHEN THE PLANS OR SPECIAL PROVISIONS INCLUDE INFORMATION PERTAINING TO THE LOCATION OF UNDERGROUND UTILITY FACILITIES, SUCH INFORMATION REPRESENTS ONLY THE OPINION OF THE ENGINEER AS TO THE LOCATION OF SUCH UTILITIES AND IS ONLY INCLUDED FOR THE CONVENIENCE OF THE BIDDER. THE ENGINEER AND OWNER ASSUME NO RESPONSIBILITY WHATEVER IN RESPECT TO THE SUFFICIENCY OR ACCURACY OF THE INFORMATION SHOWN ON THE PLANS RELATIVE TO THE LOCATION OF UNDERGROUND UTILITY FACILITIES OR THE MANNER IN WHICH THEY ARE TO BE REMOVED OR ADJUSTED. IT SHALL BE THE CONTRACTOR'S RESPONSIBILITY TO DETERMINE THE ACTUAL LOCATION OF ALL SUCH FACILITIES. HE SHALL ALSO OBTAIN FROM THE RESPECTIVE UTILITY COMPANIES, DETAILED INFORMATION RELATIVE TO THE LOCATION OF THEIR FACILITIES AND THE WORKING SCHEDULES OF THE UTILITY COMPANIES FOR REMOVING OR ADJUSTING THEM.

CONTRACTOR IS RESPONSIBLE FOR CONTACTING J.U.L.I.E. AT 1-800-892-0123 AND MUST ACQUIRE A DIG NUMBER A MINIMUM OF 72 HOURS PRIOR TO ANY WORK BEING DONE.

NOTE: CONSTRUCTION MEANS, METHODS AND JOB SITE SAFETY IS THE SOLE AND EXCLUSIVE RESPONSIBILITY OF THE CONTRACTOR

J.U.L.I.E
JOINT UTILITY LOCATION INFORMATION FOR EXCAVATION
CALL 811

811 Know what's below. Call before you dig.

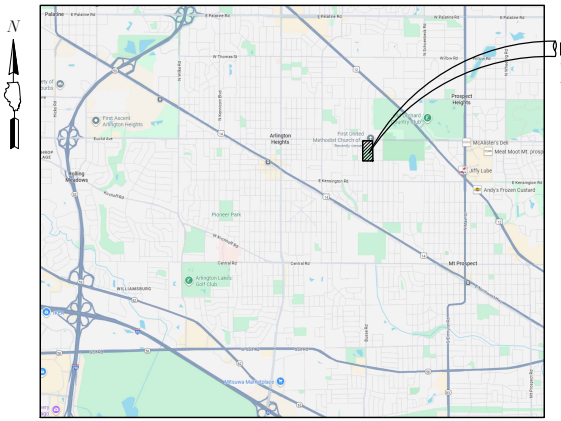

PROJECT LOCATION
1903 E EUCLID AVENUE
ARLINGTON HEIGHTS, IL 60004

LOCATION MAP
(Not to Scale)

COORDINATES SHOWN HEREON REFERENCE THE ILLINOIS STATE PLANE COORDINATION SYSTEM, EAST ZONE, NORTH AMERICAN DATUM OF 1983.

DRAINAGE STATEMENT

TO THE BEST OF OUR KNOWLEDGE AND BELIEF THE DRAINAGE OF THE SURFACE WATERS WILL NOT BE CHANGED BY CONSTRUCTION OF THIS SUBDIVISION (DEVELOPMENT), OR ON THIS SITE, OR ANY PART THEREOF, OR THAT IF SUCH SURFACE WATER DRAINAGE WILL BE CHANGED, REASONABLE PROVISIONS HAVE BEEN MADE FOR THE COLLECTION AND DIVERSION OF SUCH SURFACE WATERS INTO PUBLIC AREAS, OR DRAINS WHICH THE PROPERTY OWNER HAS A RIGHT TO USE, AND THAT SUCH SURFACE WATERS WILL BE PLANNED FOR IN ACCORDANCE WITH GENERALLY ACCEPTED ENGINEERING PRACTICES SO AS TO REDUCE THE LIKELIHOOD OF DAMAGE TO THE ADJOINING PROPERTY BECAUSE OF CONSTRUCTION OF THE SUBDIVISION (DEVELOPMENT), OR THIS SITE.

SHEET INDEX

1. TITLE SHEET
2. EXISTING CONDITIONS/DEMOLITION PLAN
3. GEOMETRIC PLAN
4. GRADING & UTILITY PLAN
5. LANDSCAPE PLAN
6. SOIL EROSION & SEDIMENT CONTROL PLAN
7. GENERAL NOTES
8. DETAILS

TOPOGRAPHIC SURVEY BY:
GEWALT HAMILTON ASSOCIATES, INC.
625 FOREST EDGE DRIVE
VERNON HILLS, ILLINOIS 60061
TELEPHONE: 847-478-9700

PLANS PREPARED FOR:
FIRST UNITED METHODIST CHURCH OF ARLINGTON HEIGHTS
1903 E EUCLID AVENUE
ARLINGTON HEIGHTS, ILLINOIS 60004
TELEPHONE: 847-255-5112

PROFESSIONAL DESIGN FIRM LICENSE:
GEWALT HAMILTON ASSOCIATES, INC.
DESIGN FIRM - LAND SURVEYOR/PROF ENG
LICENSE NUMBER: 184.000922-0010
EXPIRES: 4/30/2027

COORDINATING/PERMITTING AGENCIES:
VILLAGE OF ARLINGTON HEIGHTS 847-368-5250

062-067573 LICENSED PROFESSIONAL ENGINEER MARK G.F. COBB STATE OF ILLINOIS

SIGNED: Mark Cobb P.E.
MARK G.F. COBB
DATE: MARCH 9, 2026
ILLINOIS LICENSE NO.: 062-067573
EXPIRATION DATE: NOVEMBER 30, 2027

ISSUE FOR PERMIT

GHA GEWALT HAMILTON ASSOCIATES, INC.
625 Forest Edge Drive ■ Vernon Hills, IL 60061
TEL 847.478.9700 ■ FAX 847.478.9701

COPYRIGHT NOTICE
This drawing is the property of Gewalt-Hamilton Assoc., Inc. and is not to be used for any purpose other than the specific project and site named herein, and cannot be reproduced in any manner without the express written permission from Gewalt-Hamilton Associates, Inc.

TITLE SHEET
PARKING LOT RENOVATIONS
FIRST UNITED METHODIST CHURCH OF ARLINGTON HEIGHTS
1903 E EUCLID AVENUE, ARLINGTON HEIGHTS, IL 60004

NO.	BY	DATE	REVISION

NO.	BY	DATE	REVISION

FILE: 6195.000-DT.dwg
DRAWN BY: JMB
DATE: 03.09.2026
GHA PROJECT #: 6195.000
CHECKED BY: MGFC
DATE: 03.09.2026
SCALE: N.T.S.
SHEET NUMBER: 1
OF 8 SHEETS

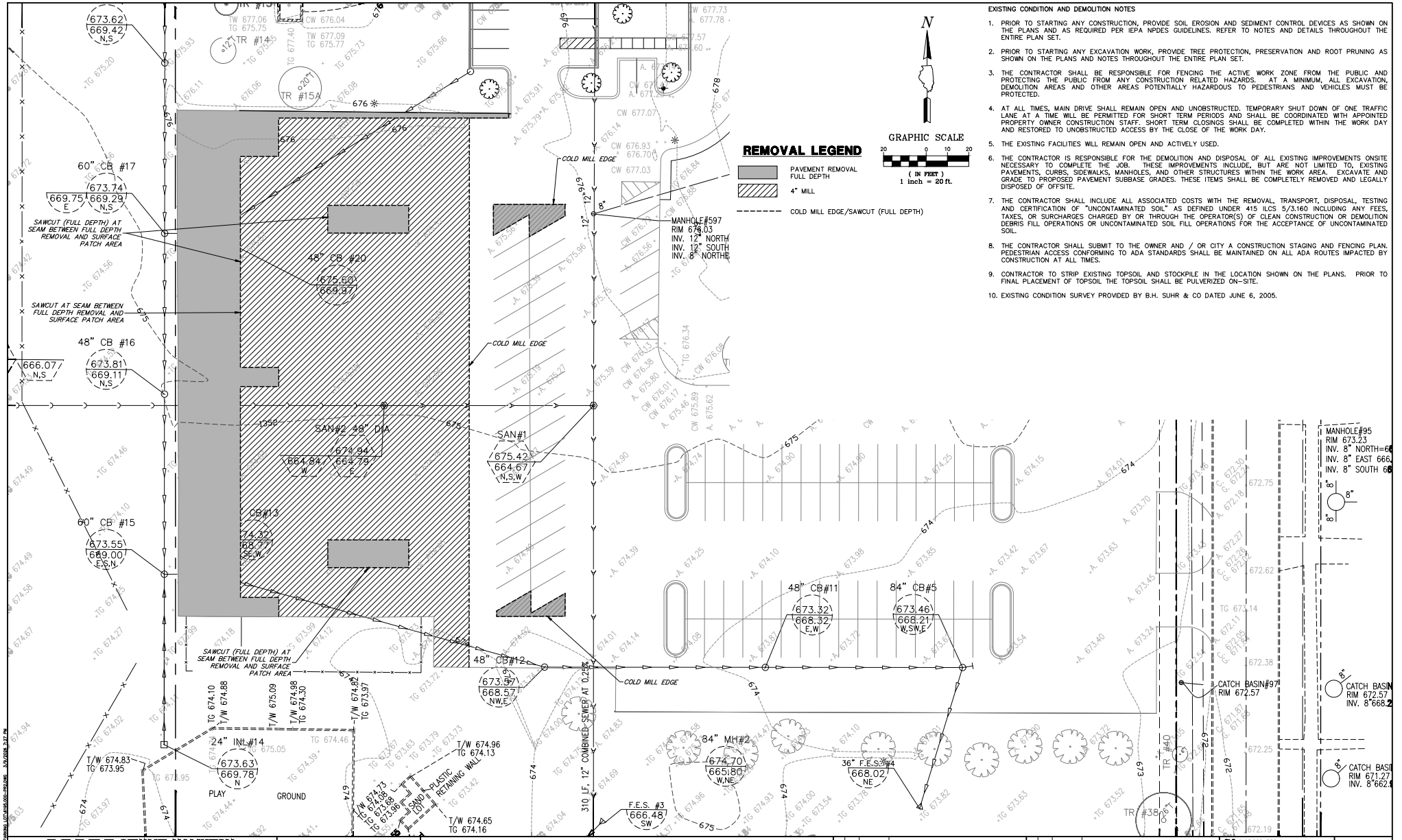

EXISTING CONDITION AND DEMOLITION NOTES

1. PRIOR TO STARTING ANY CONSTRUCTION, PROVIDE SOIL EROSION AND SEDIMENT CONTROL DEVICES AS SHOWN ON THE PLANS AND AS REQUIRED PER IEPA NPDES GUIDELINES. REFER TO NOTES AND DETAILS THROUGHOUT THE ENTIRE PLAN SET.
2. PRIOR TO STARTING ANY EXCAVATION WORK, PROVIDE TREE PROTECTION, PRESERVATION AND ROOT PRUNING AS SHOWN ON THE PLANS AND NOTES THROUGHOUT THE ENTIRE PLAN SET.
3. THE CONTRACTOR SHALL BE RESPONSIBLE FOR FENCING THE ACTIVE WORK ZONE FROM THE PUBLIC AND PROTECTING THE PUBLIC FROM ANY CONSTRUCTION RELATED HAZARDS. AT A MINIMUM, ALL EXCAVATION, DEMOLITION AREAS AND OTHER AREAS POTENTIALLY HAZARDOUS TO PEDESTRIANS AND VEHICLES MUST BE PROTECTED.
4. AT ALL TIMES, MAIN DRIVE SHALL REMAIN OPEN AND UNOBSTRUCTED. TEMPORARY SHUT DOWN OF ONE TRAFFIC LANE AT A TIME WILL BE PERMITTED FOR SHORT TERM PERIODS AND SHALL BE COORDINATED WITH APPOINTED PROPERTY OWNER CONSTRUCTION STAFF. SHORT TERM CLOSINGS SHALL BE COMPLETED WITHIN THE WORK DAY AND RESTORED TO UNOBSTRUCTED ACCESS BY THE CLOSE OF THE WORK DAY.
5. THE EXISTING FACILITIES WILL REMAIN OPEN AND ACTIVELY USED.
6. THE CONTRACTOR IS RESPONSIBLE FOR THE DEMOLITION AND DISPOSAL OF ALL EXISTING IMPROVEMENTS ONSITE NECESSARY TO COMPLETE THE JOB. THESE IMPROVEMENTS INCLUDE, BUT ARE NOT LIMITED TO, EXISTING PAVEMENTS, CURBS, SIDEWALKS, MANHOLES, AND OTHER STRUCTURES WITHIN THE WORK AREA. EXCAVATE AND GRADE TO PROPOSED PAVEMENT SUBBASE GRADES. THESE ITEMS SHALL BE COMPLETELY REMOVED AND LEGALLY DISPOSED OF OFFSITE.
7. THE CONTRACTOR SHALL INCLUDE ALL ASSOCIATED COSTS WITH THE REMOVAL, TRANSPORT, DISPOSAL, TESTING AND CERTIFICATION OF "UNCONTAMINATED SOIL" AS DEFINED UNDER 415 ILCS 5/3.160 INCLUDING ANY FEES, TAXES, OR SURCHARGES CHARGED BY OR THROUGH THE OPERATOR(S) OF CLEAN CONSTRUCTION OR DEMOLITION DEBRIS FILL OPERATIONS OR UNCONTAMINATED SOIL FILL OPERATIONS FOR THE ACCEPTANCE OF UNCONTAMINATED SOIL.
8. THE CONTRACTOR SHALL SUBMIT TO THE OWNER AND / OR CITY A CONSTRUCTION STAGING AND FENCING PLAN. PEDESTRIAN ACCESS CONFORMING TO ADA STANDARDS SHALL BE MAINTAINED ON ALL ADA ROUTES IMPACTED BY CONSTRUCTION AT ALL TIMES.
9. CONTRACTOR TO STRIP EXISTING TOPSOIL AND STOCKPILE IN THE LOCATION SHOWN ON THE PLANS. PRIOR TO FINAL PLACEMENT OF TOPSOIL THE TOPSOIL SHALL BE PULVERIZED ON-SITE.
10. EXISTING CONDITION SURVEY PROVIDED BY B.H. SUHR & CO DATED JUNE 6, 2005.

GHA GEWALT HAMILTON ASSOCIATES, INC.
625 Forest Edge Drive ■ Vernon Hills, IL. 60061
TEL 847.478.9700 ■ FAX 847.478.9701

COPYRIGHT NOTICE
This drawing is the property of Gewalt-Hamilton Assoc., Inc. and is not to be used for any purpose other than the specific project and site named herein, and cannot be reproduced in any manner without the express written permission from Gewalt-Hamilton Associates, Inc.

EXISTING CONDITIONS/DEMOLITION PLAN

PARKING LOT RENOVATIONS
FIRST UNITED METHODIST CHURCH OF ARLINGTON HEIGHTS
1903 E EUCLID AVENUE, ARLINGTON HEIGHTS, IL 60004

NO.	BY	DATE	REVISION	NO.	BY	DATE	REVISION

FILE: 6195.000-PR2.dwg
DRAWN BY: JMB
DATE: 03.09.2026
GHA PROJECT #: 6195.000
CHECKED BY: MGFC
DATE: 03.09.2026
SCALE: 1" = 20'-0"
SHEET NUMBER: 2 OF 8 SHEETS

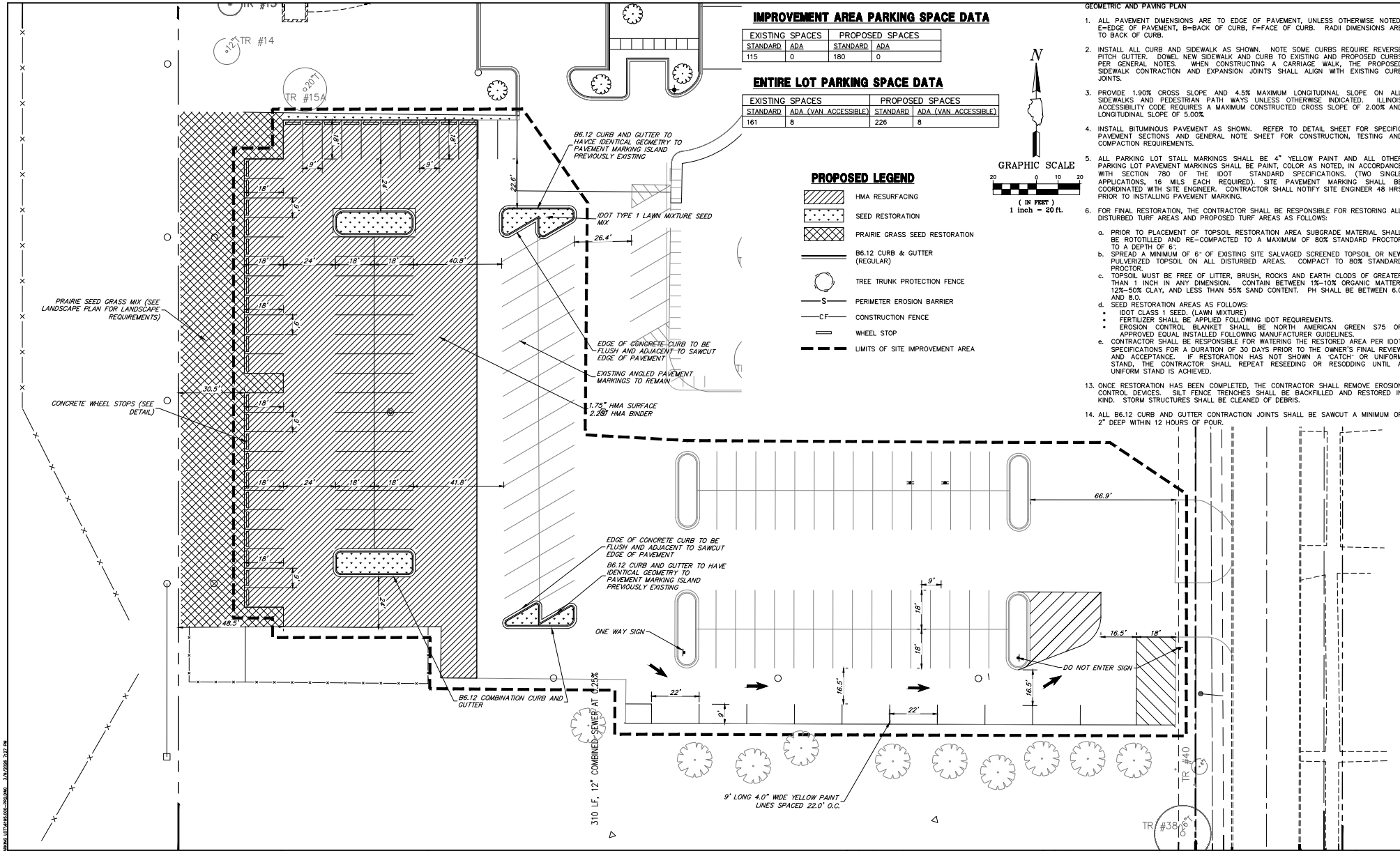

IMPROVEMENT AREA PARKING SPACE DATA

EXISTING SPACES		PROPOSED SPACES	
STANDARD	ADA	STANDARD	ADA
115	0	180	0

ENTIRE LOT PARKING SPACE DATA

EXISTING SPACES		PROPOSED SPACES	
STANDARD	ADA (VAN ACCESSIBLE)	STANDARD	ADA (VAN ACCESSIBLE)
161	8	226	8

PROPOSED LEGEND

- HMA RESURFACING
- SEED RESTORATION
- PRAIRIE GRASS SEED RESTORATION
- B6.12 CURB & GUTTER (REGULAR)
- TREE TRUNK PROTECTION FENCE
- S — PERIMETER EROSION BARRIER
- CF — CONSTRUCTION FENCE
- WHEEL STOP
- LIMITS OF SITE IMPROVEMENT AREA

N

GRAPHIC SCALE
20 0 10 20
(IN FEET)
1 inch = 20 ft.

GEOMETRIC AND PAVING PLAN

1. ALL PAVEMENT DIMENSIONS ARE TO EDGE OF PAVEMENT, UNLESS OTHERWISE NOTED. E=EDGE OF PAVEMENT, B=BACK OF CURB, F=FACE OF CURB. RADII DIMENSIONS ARE TO BACK OF CURB.
2. INSTALL ALL CURB AND SIDEWALK AS SHOWN. NOTE SOME CURBS REQUIRE REVERSE PITCH GUTTER. DOWEL NEW SIDEWALK AND CURB TO EXISTING AND PROPOSED CURBS PER GENERAL NOTES. WHEN CONSTRUCTING A CARRIAGE WALK, THE PROPOSED SIDEWALK CONTRACTION AND EXPANSION JOINTS SHALL ALIGN WITH EXISTING CURB JOINTS.
3. PROVIDE 1.90% CROSS SLOPE AND 4.5% MAXIMUM LONGITUDINAL SLOPE ON ALL SIDEWALKS AND PEDESTRIAN PATH WAYS UNLESS OTHERWISE INDICATED. ILLINOIS ACCESSIBILITY CODE REQUIRES A MAXIMUM CONSTRUCTED CROSS SLOPE OF 2.00% AND LONGITUDINAL SLOPE OF 5.00%.
4. INSTALL BITUMINOUS PAVEMENT AS SHOWN. REFER TO DETAIL SHEET FOR SPECIFIC PAVEMENT SECTIONS AND GENERAL NOTE SHEET FOR CONSTRUCTION, TESTING AND COMPACTION REQUIREMENTS.
5. ALL PARKING LOT STALL MARKINGS SHALL BE 4" YELLOW PAINT AND ALL OTHER PARKING LOT PAVEMENT MARKINGS SHALL BE PAINT, COLOR AS NOTED, IN ACCORDANCE WITH SECTION 780 OF THE IDOT STANDARD SPECIFICATIONS. (TWO SINGLE APPLICATIONS, 16 MILS EACH REQUIRED). SITE PAVEMENT MARKING SHALL BE COORDINATED WITH SITE ENGINEER. CONTRACTOR SHALL NOTIFY SITE ENGINEER 48 HRS PRIOR TO INSTALLING PAVEMENT MARKING.
6. FOR FINAL RESTORATION, THE CONTRACTOR SHALL BE RESPONSIBLE FOR RESTORING ALL DISTURBED TURF AREAS AND PROPOSED TURF AREAS AS FOLLOWS:
   a. PRIOR TO PLACEMENT OF TOPSOIL RESTORATION AREA SUBGRADE MATERIAL SHALL BE ROTOTILLED AND RE-COMPACTED TO A MAXIMUM OF 80% STANDARD PROCTOR TO A DEPTH OF 6".
   b. SPREAD A MINIMUM OF 6" OF EXISTING SITE SALVAGED SCREENED TOPSOIL OR NEW PULVERIZED TOPSOIL ON ALL DISTURBED AREAS. COMPACT TO 80% STANDARD PROCTOR.
   c. TOPSOIL MUST BE FREE OF LITTER, BRUSH, ROCKS AND EARTH CLODS OF GREATER THAN 1 INCH IN ANY DIMENSION. CONTAIN BETWEEN 1%-10% ORGANIC MATTER, 12%-50% CLAY, AND LESS THAN 55% SAND CONTENT. PH SHALL BE BETWEEN 6.0 AND 8.0.
   d. SEED RESTORATION AREAS AS FOLLOWS:
      - IDOT CLASS 1 SEED. (LAWN MIXTURE)
      - FERTILIZER SHALL BE APPLIED FOLLOWING IDOT REQUIREMENTS.
      - EROSION CONTROL BLANKET SHALL BE NORTH AMERICAN GREEN S75 OR APPROVED EQUAL INSTALLED FOLLOWING MANUFACTURER GUIDELINES.
   e. CONTRACTOR SHALL BE RESPONSIBLE FOR WATERING THE RESTORED AREA PER IDOT SPECIFICATIONS FOR A DURATION OF 30 DAYS PRIOR TO THE OWNER'S FINAL REVIEW AND ACCEPTANCE. IF RESTORATION HAS NOT SHOWN A "CATCH" OR UNIFORM STAND, THE CONTRACTOR SHALL REPEAT RESEEDING OR RESODDING UNTIL A UNIFORM STAND IS ACHIEVED.
13. ONCE RESTORATION HAS BEEN COMPLETED, THE CONTRACTOR SHALL REMOVE EROSION CONTROL DEVICES. SILT FENCE TRENCHES SHALL BE BACKFILLED AND RESTORED IN KIND. STORM STRUCTURES SHALL BE CLEANED OF DEBRIS.
14. ALL B6.12 CURB AND GUTTER CONTRACTION JOINTS SHALL BE SAWCUT A MINIMUM OF 2" DEEP WITHIN 12 HOURS OF POUR.

GHA GEWALT HAMILTON ASSOCIATES, INC.
625 Forest Edge Drive ■ Vernon Hills, IL 60061
TEL 847.478.9700 ■ FAX 847.478.9701

COPYRIGHT NOTICE
This drawing is the property of Gewalt-Hamilton Assoc., Inc. and is not to be used for any purpose other than the specific project and site named herein, and cannot be reproduced in any manner without the express written permission from Gewalt-Hamilton Associates, Inc.

GEOMETRIC PLAN

PARKING LOT RENOVATIONS
FIRST UNITED METHODIST CHURCH OF ARLINGTON HEIGHTS
1903 E EUCLID AVENUE, ARLINGTON HEIGHTS, IL 60004

NO.	BY	DATE	REVISION
1	MGFC	10.09.2025	PER VILLAGE COMMENTS

FILE: 6195.000-PR2.dwg
DRAWN BY: JMB
DATE: 03.09.2026
GHA PROJECT #: 6195.000
CHECKED BY: MGFC
DATE: 03.09.2026
SCALE: 1" = 20'-0"
SHEET NUMBER: 3
OF 8 SHEETS

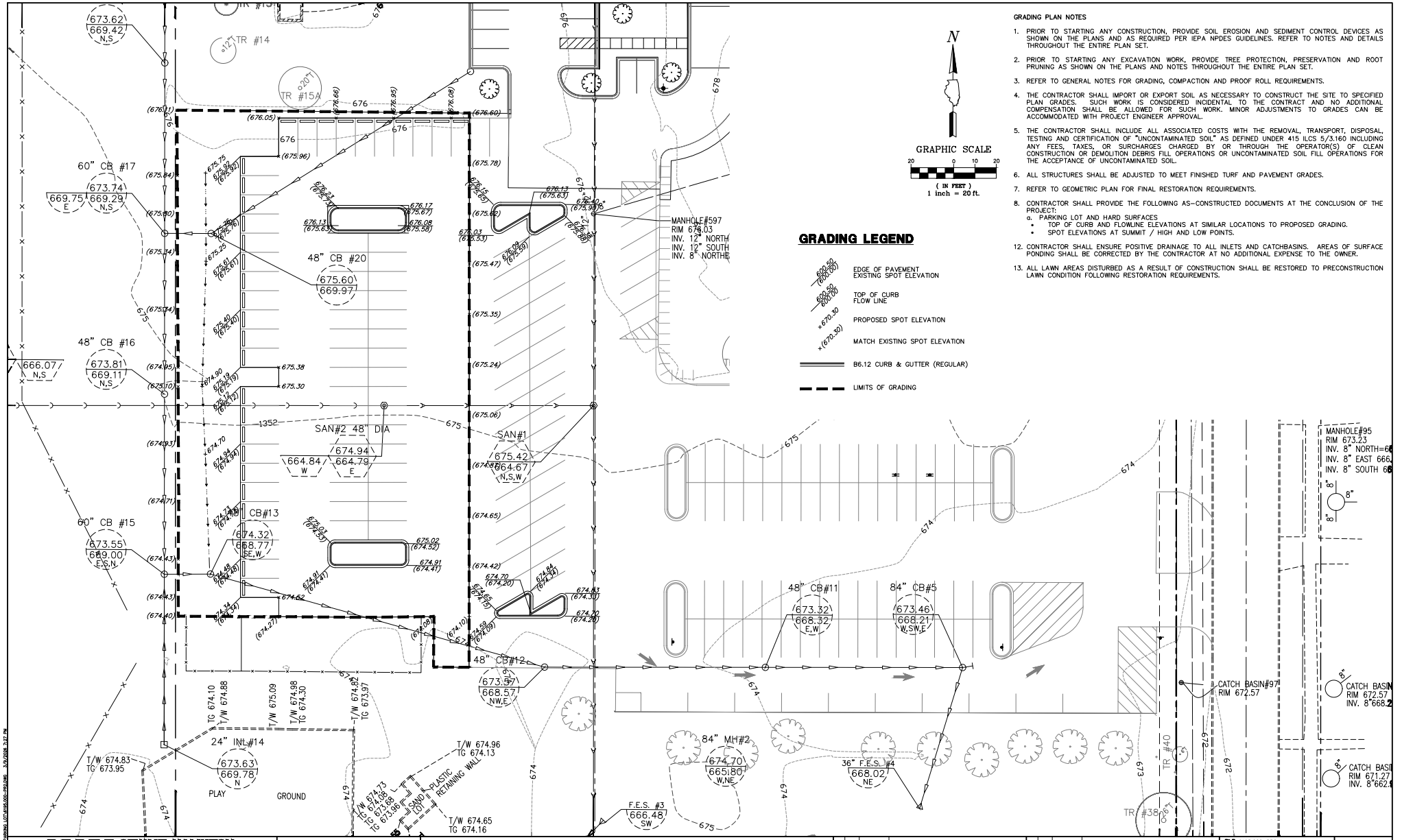

N

GRAPHIC SCALE

20 0 10 20

(IN FEET)
1 inch = 20 ft.

GRADING LEGEND

- EDGE OF PAVEMENT / EXISTING SPOT ELEVATION
- TOP OF CURB / FLOW LINE
- PROPOSED SPOT ELEVATION
- MATCH EXISTING SPOT ELEVATION
- B6.12 CURB & GUTTER (REGULAR)
- LIMITS OF GRADING

GRADING PLAN NOTES

1. PRIOR TO STARTING ANY CONSTRUCTION, PROVIDE SOIL EROSION AND SEDIMENT CONTROL DEVICES AS SHOWN ON THE PLANS AND AS REQUIRED PER IEPA NPDES GUIDELINES. REFER TO NOTES AND DETAILS THROUGHOUT THE ENTIRE PLAN SET.
2. PRIOR TO STARTING ANY EXCAVATION WORK, PROVIDE TREE PROTECTION, PRESERVATION AND ROOT PRUNING AS SHOWN ON THE PLANS AND NOTES THROUGHOUT THE ENTIRE PLAN SET.
3. REFER TO GENERAL NOTES FOR GRADING, COMPACTION AND PROOF ROLL REQUIREMENTS.
4. THE CONTRACTOR SHALL IMPORT OR EXPORT SOIL AS NECESSARY TO CONSTRUCT THE SITE TO SPECIFIED PLAN GRADES. SUCH WORK IS CONSIDERED INCIDENTAL TO THE CONTRACT AND NO ADDITIONAL COMPENSATION SHALL BE ALLOWED FOR SUCH WORK. MINOR ADJUSTMENTS TO GRADES CAN BE ACCOMMODATED WITH PROJECT ENGINEER APPROVAL.
5. THE CONTRACTOR SHALL INCLUDE ALL ASSOCIATED COSTS WITH THE REMOVAL, TRANSPORT, DISPOSAL, TESTING AND CERTIFICATION OF "UNCONTAMINATED SOIL" AS DEFINED UNDER 415 ILCS 5/3.160 INCLUDING ANY FEES, TAXES, OR SURCHARGES CHARGED BY OR THROUGH THE OPERATOR(S) OF CLEAN CONSTRUCTION OR DEMOLITION DEBRIS FILL OPERATIONS OR UNCONTAMINATED SOIL FILL OPERATIONS FOR THE ACCEPTANCE OF UNCONTAMINATED SOIL.
6. ALL STRUCTURES SHALL BE ADJUSTED TO MEET FINISHED TURF AND PAVEMENT GRADES.
7. REFER TO GEOMETRIC PLAN FOR FINAL RESTORATION REQUIREMENTS.
8. CONTRACTOR SHALL PROVIDE THE FOLLOWING AS-CONSTRUCTED DOCUMENTS AT THE CONCLUSION OF THE PROJECT:
   a. PARKING LOT AND HARD SURFACES
      - TOP OF CURB AND FLOWLINE ELEVATIONS AT SIMILAR LOCATIONS TO PROPOSED GRADING.
      - SPOT ELEVATIONS AT SUMMIT / HIGH AND LOW POINTS.
12. CONTRACTOR SHALL ENSURE POSITIVE DRAINAGE TO ALL INLETS AND CATCHBASINS. AREAS OF SURFACE PONDING SHALL BE CORRECTED BY THE CONTRACTOR AT NO ADDITIONAL EXPENSE TO THE OWNER.
13. ALL LAWN AREAS DISTURBED AS A RESULT OF CONSTRUCTION SHALL BE RESTORED TO PRECONSTRUCTION LAWN CONDITION FOLLOWING RESTORATION REQUIREMENTS.

GHA GEWALT HAMILTON ASSOCIATES, INC.
625 Forest Edge Drive ■ Vernon Hills, IL. 60061
TEL 847.478.9700 ■ FAX 847.478.9701

COPYRIGHT NOTICE
This drawing is the property of Gewalt-Hamilton Assoc., Inc. and is not to be used for any purpose other than the specific project and site named herein, and cannot be reproduced in any manner without the express written permission from Gewalt-Hamilton Associates, Inc.

GRADING & UTILITY PLAN

PARKING LOT RENOVATIONS
FIRST UNITED METHODIST CHURCH OF ARLINGTON HEIGHTS
1903 E EUCLID AVENUE, ARLINGTON HEIGHTS, IL 60004

NO.	BY	DATE	REVISION
NO.	BY	DATE	REVISION

FILE: 6195.000-PR2.dwg
DRAWN BY: JMB
DATE: 03.09.2026
GHA PROJECT #: 6195.000
CHECKED BY: MGFC
DATE: 03.09.2026
SCALE: 1" = 20'
SHEET NUMBER: 4
OF 6 SHEETS

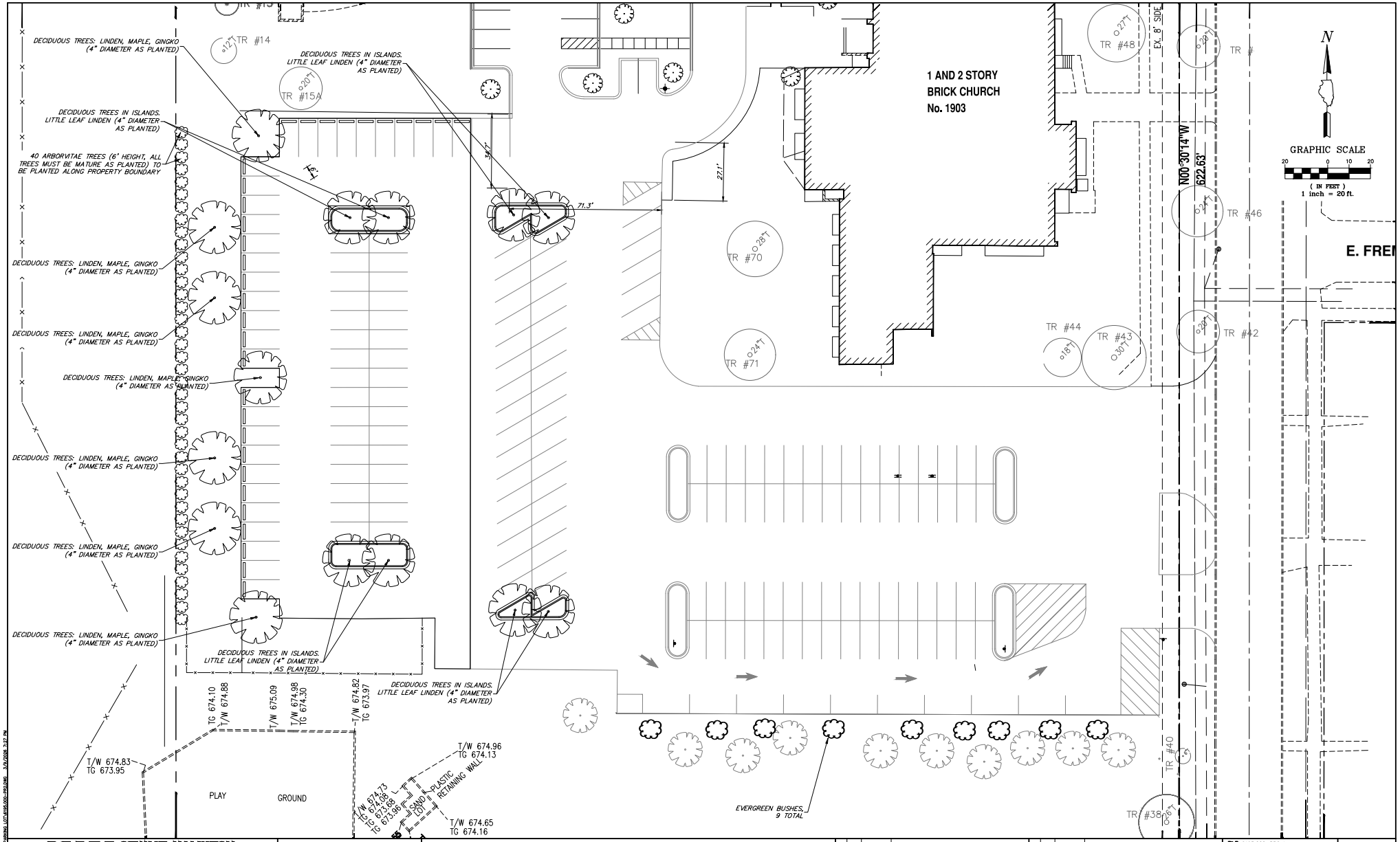

GHA GEWALT HAMILTON ASSOCIATES, INC.
625 Forest Edge Drive ■ Vernon Hills, IL. 60061
TEL 847.478.9700 ■ FAX 847.478.9701

COPYRIGHT NOTICE
This drawing is the property of Gewalt-Hamilton Assoc., Inc. and is not to be used for any purpose other than the specific project and site named herein, and cannot be reproduced in any manner without the express written permission from Gewalt-Hamilton Associates, Inc.

LANDSCAPE PLAN

PARKING LOT RENOVATIONS
FIRST UNITED METHODIST CHURCH OF ARLINGTON HEIGHTS
1903 E EUCLID AVENUE, ARLINGTON HEIGHTS, IL 60004

NO.	BY	DATE	REVISION	NO.	BY	DATE	REVISION

FILE: 6195.000-PR2.dwg
DRAWN BY: JMB
DATE: 03.09.2026
GHA PROJECT #: 6195.000
CHECKED BY: MGFC
DATE: 03.09.2026
SCALE: 1" = 20'-0"
SHEET NUMBER: 5
OF 6 SHEETS

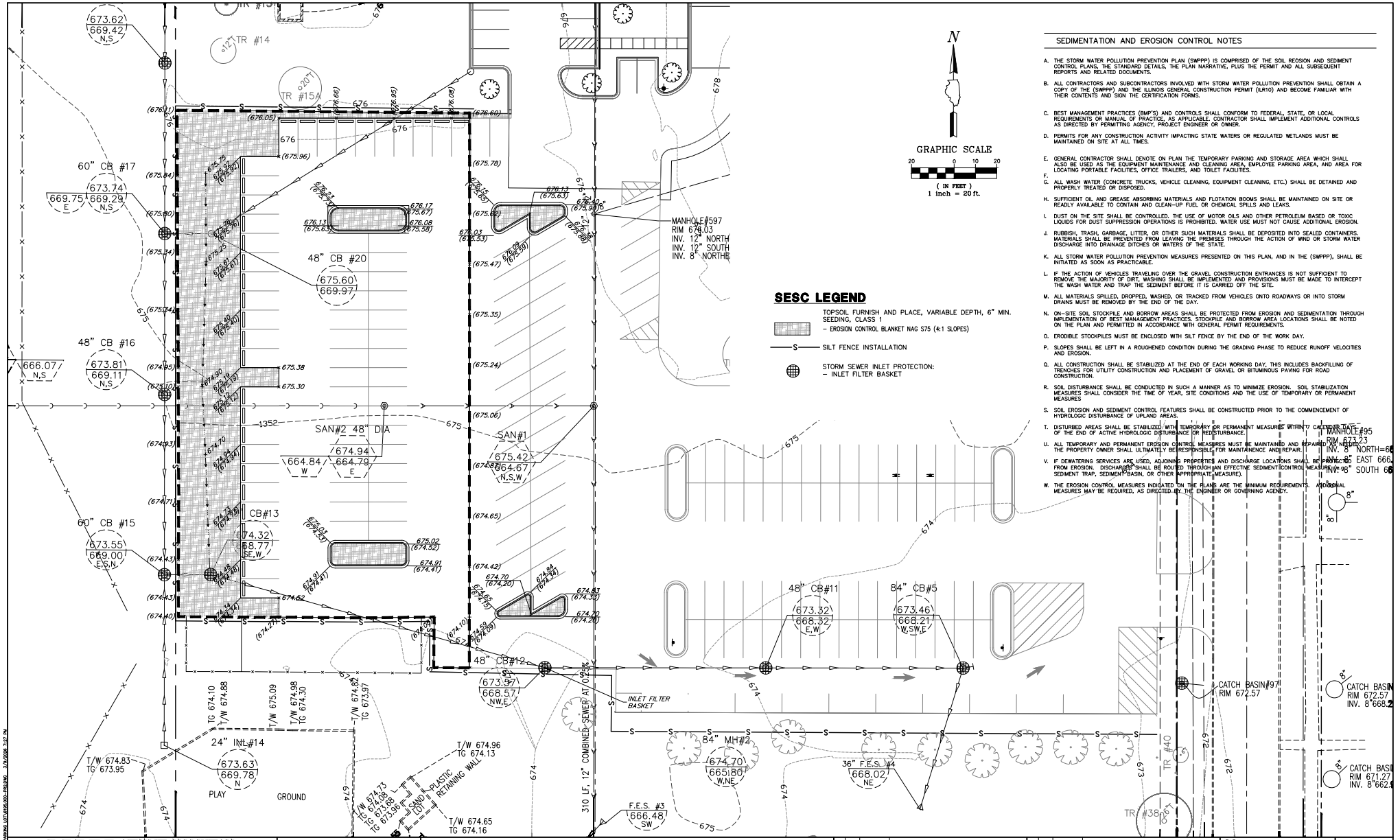

GHA GEWALT HAMILTON ASSOCIATES, INC.
625 Forest Edge Drive ■ Vernon Hills, IL. 60061
TEL 847.478.9700 ■ FAX 847.478.9701

COPYRIGHT NOTICE
This drawing is the property of Gewalt–Hamilton Assoc., Inc. and is not to be used for any purpose other than the specific project and site named herein, and cannot be reproduced in any manner without the express written permission from Gewalt–Hamilton Associates, Inc.

SOIL EROSION & SEDIMENT CONTROL PLAN

PARKING LOT RENOVATIONS
FIRST UNITED METHODIST CHURCH OF ARLINGTON HEIGHTS
1903 E EUCLID AVENUE, ARLINGTON HEIGHTS, IL 60004

NO.	BY	DATE	REVISION
1	MGFC	01.30.2026	PER VILLAGE COMMENTS

NO.	BY	DATE	REVISION

FILE 6195.000–PR2.dwg
DRAWN BY: JMB
DATE 03.09.2026
GHA PROJECT # 6195.000
CHECKED BY: MGFC
DATE 03.09.2026
SCALE 1" = 20'-0"
SHEET NUMBER 6
OF 8 SHEETS

GENERAL NOTES

1. ALL CONSTRUCTION SHALL BE PERFORMED ACCORDING TO THE ILLINOIS DEPARTMENT OF TRANSPORTATION "STANDARD SPECIFICATIONS FOR ROAD AND BRIDGE CONSTRUCTION" LATEST EDITION, THE "SUPPLEMENTAL SPECIFICATIONS AND RECURRING SPECIAL PROVISIONS" LATEST EDITION, THE "STANDARD SPECIFICATIONS FOR WATER AND SEWER MAIN CONSTRUCTION IN ILLINOIS" LATEST EDITION, THE ILLINOIS PLUMBING CODE, THE DETAILS IN THESE PLANS, THE CONTRACT DOCUMENTS, ALL APPLICABLE REQUIREMENTS OF THE ILLINOIS DEPARTMENT OF TRANSPORTATION, THE IEPA AND ORDINANCES OF AUTHORITIES HAVING JURISDICTION AND ALL ADDENDA THERETO.

2. EASEMENTS FOR THE EXISTING UTILITIES, BOTH PUBLIC AND PRIVATE AND UTILITIES WITHIN PUBLIC RIGHTS-OF-WAY ARE SHOWN ON THE PLANS ACCORDING TO AVAILABLE RECORDS. THE CONTRACTOR SHALL BE RESPONSIBLE FOR DETERMINING THE EXACT LOCATION IN THE FIELD OF THESE UTILITY LINES AND THEIR PROTECTION FROM DAMAGE DUE TO CONSTRUCTION OPERATIONS. IF EXISTING UTILITY LINES OF ANY NATURE ARE ENCOUNTERED WHICH CONFLICT WITH NEW CONSTRUCTION, THE CONTRACTOR SHALL NOTIFY THE ENGINEER IMMEDIATELY SO THAT THE CONFLICT MAY BE RESOLVED.

3. WHENEVER, DURING CONSTRUCTION OPERATIONS, ANY LOOSE MATERIAL IS DEPOSITED IN THE FLOW LINE OF GUTTERS, DRAINAGE STRUCTURES, DITCHES, ETC. SUCH THAT THE NATURAL FLOW LINE OF WATER IS OBSTRUCTED, THE LOOSE MATERIAL WILL BE REMOVED AT THE CLOSE OF EACH WORKING DAY. AT THE CONCLUSION OF CONSTRUCTION OPERATIONS, ALL DRAINAGE STRUCTURES AND FLOW LINES SHALL BE FREE FROM DIRT AND DEBRIS. THIS WORK SHALL BE CONSIDERED INCLUDED IN THE CONTRACT. THE CONTRACTOR'S FAILURE TO PROVIDE THE ABOVE WILL PRECLUDE ANY POSSIBLE ADDED COMPENSATION REQUESTED DUE TO DELAYS OR UNSUITABLE MATERIALS CREATED AS A RESULT THEREOF.

4. THE CONTRACTOR SHALL VERIFY ALL DIMENSIONS AND EXISTING CONDITIONS AFFECTING THEIR WORK WITH THE ACTUAL CONDITIONS AT THE JOB SITE PRIOR TO ORDERING MATERIALS. IN ADDITION, THE CONTRACTOR MUST VERIFY THE LINE AND GRADES. IF THERE ARE ANY DISCREPANCIES FROM WHAT IS SHOWN ON THE CONSTRUCTION PLANS, STANDARD SPECIFICATIONS AND/OR SPECIAL DETAILS, THE CONTRACTOR SHALL SECURE WRITTEN INSTRUCTION FROM THE ENGINEER PRIOR TO PROCEEDING WITH ANY PART OF THE WORK AFFECTED BY OMISSION OR DISCREPANCIES. FAILING TO SECURE SUCH INSTRUCTION, THE CONTRACTOR WILL BE CONSIDERED TO HAVE PROCEEDED AT HIS/HER OWN RISK AND EXPENSE AND NO ADDITIONAL COMPENSATION WILL BE PROVIDED FOR ANY COSTS INCURRED..

5. ALL PAVEMENT DIMENSIONS ARE SHOWN TO EDGE OF PAVEMENT UNLESS OTHERWISE NOTED.

6. WHERE SECTION OR SUBSECTION MONUMENTS ARE ENCOUNTERED, THE ENGINEER SHALL BE NOTIFIED BEFORE THE MONUMENTS ARE REMOVED. THE CONTRACTOR SHALL CAREFULLY PRESERVE ALL PROPERTY MARKS AND MONUMENTS UNTIL THE OWNER, AUTHORIZED SURVEYOR OR AGENT HAS WITNESSED OR OTHERWISE REFERENCED THEIR LOCATION.

7. THE CONTRACTOR SHALL NOTIFY THE ENGINEER AT LEAST 72 HOURS PRIOR TO BEGINNING WORK.

8. IF DURING CONSTRUCTION THE CONTRACTOR ENCOUNTERS OR OTHERWISE BECOMES AWARE OF ANY SEWERS OR UNDERDRAINS OTHER THAN THOSE SHOWN ON THE PLANS, HE/SHE SHALL INFORM THE ENGINEER, WHO SHALL DIRECT THE WORK NECESSARY TO MAINTAIN OR REPLACE THE FACILITIES IN SERVICE AND TO PROTECT THEM FROM DAMAGE DURING CONSTRUCTION IF MAINTAINED. EXISTING FACILITIES TO BE MAINTAINED THAT ARE DAMAGED BECAUSE OF NON-COMPLIANCE WITH THIS PROVISION SHALL BE REPLACED AT THE CONTRACTOR'S OWN EXPENSE.

9. THE CONTRACTOR SHALL PROVIDE TEMPORARY TOILET FACILITIES AND HAND SANITIZING STATIONS FOR THE USE OF ALL THE CONTRACTORS PERSONNEL EMPLOYED ON THE WORK SITE. THE FACILITIES SHALL BE MAINTAINED IN PROPER SANITARY CONDITION THROUGHOUT THE PROJECT. THE LOCATION OF THE TEMPORARY FACILITIES SHALL BE APPROVED BY THE ENGINEER.

10. THE CONTRACTOR IS RESPONSIBLE FOR COMPLYING WITH THE NPDES PERMIT AND SWPPP MANUAL. IF NO NPDES PERMIT OR SWPPP MANUAL IS NEEDED FOR THE PROJECT THE CONTRACTOR SHALL PERFORM SOIL EROSION SEDIMENT CONTROL BEST PRACTICES OR AS DIRECTED BY THE OWNER TO PREVENT ILLICIT DISCHARGES FROM THE SITE.

PROJECT SPECIFIC NOTES

1. THE CONTRACTOR SHALL PROVIDE AS-BUILT DRAWINGS THAT INCLUDE; CRITICAL SPOT GRADES SUCH AS OVERFLOW ELEVATIONS, SPOT ELEVATIONS NEAR ENTRANCES, SPOT ELEVATIONS ALONG THE DESIGNATED ADA ROUTE, RIM AND INVERT ELEVATIONS OF ALL SEWERS, AND ALL FIELD CHANGES FROM THE APPROVED DRAWINGS.

2. ALL WORK PERFORMED UNDER THIS CONTRACT SHALL BE GUARANTEED BY THE CONTRACTOR AND HIS SURETY FOR A PERIOD OF 12 MONTHS FROM THE DATE OF INITIAL ACCEPTANCE OF THE WORK BY THE OWNER AGAINST ALL DEFECTS IN MATERIALS AND WORKMANSHIP OF WHATEVER NATURE.

3. ALL CONSTRUCTION WILL BE INSPECTED BY THE OWNER'S REPRESENTATIVE. ALL WORK SHALL CONFORM TO THE REQUIREMENTS OF THE MUNICIPALITY AS WELL AS THE STANDARD SPECIFICATIONS.

4. ALL PUBLIC WATER MAINS AND SANITARY SEWER MAINS MUST BE ACCEPTED BY THE VILLAGE OF ARLINGTON HEIGHTS.

5. THE SEWER AND WATER CONTRACTOR SHALL BE REQUIRED TO BE LICENSED AND BONDED WITH THE VILLAGE OF ARLINGTON HEIGHTS BEFORE WORK IS STARTED.

6. CONTRACTOR SHALL NOTIFY THE VILLAGE OF ARLINGTON HEIGHTS (847-368-5000) AND THE PROJECT ENGINEER (847-478-9700) AT LEAST 72 HOURS PRIOR TO BEGINNING ANY WORK ON THIS PROJECT.

7. THE CONTRACTOR SHALL INDEMNIFY THE OWNER, ENGINEER, THE MUNICIPALITY AND THEIR AGENTS, FROM ALL LIABILITY INVOLVED IN CONSTRUCTION, INSTALLATION AND TESTING OF THE WORK ON THIS PROJECT.

8. THE CONTRACTOR MUST CARRY INSURANCE IN ACCORDANCE WITH THE STANDARD SPECIFICATIONS. ALL OFFICIALS, EMPLOYEES AND AGENTS OF GEWALT HAMILTON ASSOCIATES MUST BE LISTED AS ADDITIONAL INSURED.

9. ALL ELEVATIONS ARE ON NAVD 88 VERTICAL DATUM.

10. THE CONTRACTOR SHALL BE RESPONSIBLE FOR THE INSTALLATION AND MAINTENANCE OF ALL TRAFFIC CONTROL TO ADEQUATELY INFORM AND PROTECT THE PUBLIC OF ALL CONSTRUCTION OPERATIONS.

11. PRIOR TO PLACEMENT OF FABRIC AND STONE, THE SUBGRADE SHALL BE PROOF-ROLLED IN THE PRESENCE OF THE ENGINEER. PROOF-ROLLING SHALL BE DONE USING A THREE AXLE DUMP TRUCK TOGETHER WITH LOAD WEIGHING AT LEAST TWENTY-FIVE (25) TONS. THE LOAD SHALL BE UNIFORMLY PLACED IN THE DUMP BODY. ALL DEFICIENCIES SHALL BE REPAIRED AND RE-PROOF-ROLLED UNTIL FOUND ACCEPTABLE TO THE ENGINEER.

12. ALL STONE USED ON THE PROJECT SHALL BE CRUSHED UNLESS SPECIFICALLY NOTED OTHERWISE.

13. ALL CONNECTIONS TO EXISTING STORM MANHOLES SHALL BE INSTALLED WITH A NEOPRENE BOOT SECURED WITH DOUBLE STAINLESS STEEL STRAPS MEETING THE REQUIREMENTS OF ASTM C-923.

14. ALL CONCRETE SHALL HAVE A LIGHT BROOM FINISH APPLIED WITHIN 1 HOUR OF FINAL STRIKING.

15. ALL CONCRETE SHALL CONSIST OF PORTLAND CEMENT CONCRETE MEETING REQUIREMENTS OF SECTION 1020. ALL SIDEWALKS, CURBS AND POST FOUNDATIONS SHALL BE CLASS SI 3,500 PSI @ 14 DAYS. ALL PAVEMENT SHALL BE CLASS PV 3,500 PSI @ 14 DAYS. WHERE NOTED ON THE PLANS HIGH EARLY CONCRETE SHALL BE CLASS PV TYPE III 3,500 PSI CONCRETE @ 3 DAYS. ALL CONCRETE REQUIRING A CURE TIME FASTER THAN 3 DAYS SHALL HAVE A MIX DESIGN SUBMITTED TO THE ENGINEER FOR APPROVAL. WHEN REQUIRED BY THE MUNICIPALITY, FLY ASH SHALL NOT BE USED IN THE MIX DESIGN. SLUMP SHALL BE 2-4" AND AIR CONTENT SHALL BE BETWEEN 5-8% UNLESS MODIFIED BY ARTICLE 1020.04.

16. ALL CONCRETE SHALL HAVE A WHITE, IDOT TYPE 3 CURING COMPOUND APPLIED TO THE SURFACE WITHIN 1 HOUR OF FINAL STRIKING AT THE MANUFACTURER RECOMMENDED APPLICATION RATE.

17. 3/4" THICK PRE-MOLDED FIBER EXPANSION JOINTS WITH 2 , 3/4" x 18" PLAIN ROUND, STEEL DOWEL BARS SHALL BE INSTALLED IN ALL CURBS AT (45') FORTY-FIVE FOOT INTERVALS AND AT ALL P.C.'S, P.T.'S AND CURB RETURNS. ALTERNATE ENDS OF THE DOWEL BARS SHALL BE GREASED AND FITTED WITH METAL EXPANSION TUBES. ALL EXPANSION JOINTS MUST BE FREE OF CONCRETE FOR FULL DEPTH. CONTRACTION JOINTS SHALL BE TOOLED AT 15' INTERVALS.

18. ALL DOWEL BARS AND TIE BARS SHALL BE EPOXY COATED UNLESS NOTED OTHERWISE.

19. ALL PAVEMENT SUBGRADE SHALL BE COMPACTED TO 95% MODIFIED PROCTOR DENSITY (ASTM D-1557). ALL SUBGRADE IN LAWN AREAS SHALL BE COMPACTED TO 90% MODIFIED PROCTOR DENSITY (ASTM D-1557). ALL TOPSOIL AND SUBGRADE 6" BELOW TOPSOIL SHALL BE COMPACTED TO 80% STANDARD PROCTOR DENSITY (ASTM D-698)

20. SPREAD SCREENED TOPSOIL ON ALL DISTURBED AREAS AND PROPOSED GREEN AREAS. TOPSOIL SHALL COMPLY WITH REQUIREMENTS OF ARTICLE 1081.05.

HOT-MIX ASPHALT MIXTURE REQUIREMENTS	
MIXTURE TYPE	AIR VOIDS @ Ndes
RECONSTRUCTION	
HOT-MIX ASPHALT SURFACE COURSE, MIX "D", IL-9.5, N50, 2.0"	3.5% @ 50 GYR

THE UNIT WEIGHT USED TO CALCULATE ALL HMA SURFACE MIXTURE QUANTITIES IS 112 LBS/SQ.YD./IN.

THE "AC TYPE" SHALL BE "PG 64-22" UNLESS MODIFIED BY DISTRICT ONE SPECIAL PROVISIONS.

FOR USE OF RECYCLED MATERIALS SEE SPECIAL PROVISIONS.

GHA GEWALT HAMILTON ASSOCIATES, INC.
625 Forest Edge Drive ■ Vernon Hills, IL. 60061
TEL 847.478.9700 ■ FAX 847.478.9701

COPYRIGHT NOTICE
This drawing is the property of Gewalt-Hamilton Assoc., Inc. and is not to be used for any purpose other than the specific project and site named herein, and cannot be reproduced in any manner without the express written permission from Gewalt-Hamilton Associates, Inc.

GENERAL NOTES

PARKING LOT RENOVATIONS
FIRST UNITED METHODIST CHURCH OF ARLINGTON HEIGHTS
1903 E EUCLID AVENUE, ARLINGTON HEIGHTS, IL 60004

NO.	BY	DATE	REVISION	NO.	BY	DATE	REVISION

FILE: 6195.000-DT.dwg
DRAWN BY: JMB
DATE: 03.09.2026
GHA PROJECT #: 6195.000
CHECKED BY: MGFC
DATE: 03.09.2026
SCALE:
SHEET NUMBER: 7
OF 8 SHEETS

B6.12 CURB & GUTTER

NOTES:

1. SET EXPANSION JOINTS AT ALL PC'S, PT'S, FIVE FEET ON EITHER SIDE OF ANY FRAMES, AND AT 45' MAX. INTERVALS.
2. SAW CUT CONTRACTION JOINTS FULL FACE AND TOP, AT LEAST 2 INCHES IN DEPTH AND AT 15' MAXIMUM INTERVALS WITHIN 24 HOURS OF POURING.
3. SEE "EXPANSION JOINT DETAIL" FOR EXPANSION JOINT REQUIREMENTS.
4. CURING COMPOUND REQUIRED.

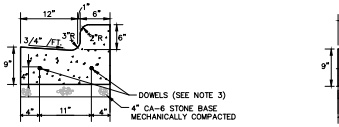

REGULAR SECTION

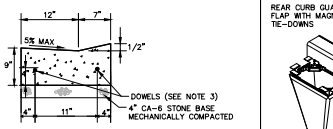

ADA DEPRESSED SECTION

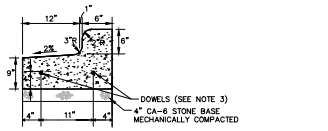

REVERSE PITCH SECTION

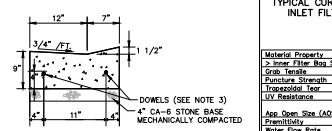

REGULAR DEPRESSED SECTION

02.01.2021

GHA GEWALT HAMILTON ASSOCIATES, INC.

INLET FILTER BASKET DETAIL

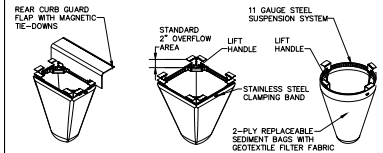

TYPICAL CURB BOX INLET FILTER | TYPICAL FLAT/RECTANGULAR/ROLLED CURB INLET FILTER | TYPICAL ROUND INLET FILTER

Material Property	Test Method	Value (min. ave.)	
> Inner Filter Bag Specs (2ft²/min vol)		Non-Woven	Woven Mono
Grab Tensile	ASTM D 4632	100 lbs	200 lbs
Puncture Strength	ASTM D 4833	65 lbs	90 lbs
Trapezoidal Tear	ASTM D 4535	45 lbs	75 lbs
UV Resistance	ASTM D 4355	70% at 500 hrs	90%
App. Open Size (AOS)	ASTM D 4751	70 sieve (.212 mm)	40 sieve (.425 mm)
Permittivity	ASTM D 4491	2.0/sec	2.1/sec
Water Flow Rate	ASTM D 4491	145 gpm/sqft.	145gpm/sqft
> Polyester Outer Reinforcement Bag Specifications			
Weight	ASTM D 3776	4.55 oz/sqyd +/-15%	
Thickness	ASTM D 1777	.040 +/- .005	
> Frame Construction			
A36 Structural Steel; 11 Gauge, Zinc Plated	ASTM A 576	Tensile Strength > 58,000 psi Yield Strength > 36,000 psi	

MAINTENANCE
1. CLEAN OUT AFTER EVERY RAIN EVENT

ACCEPTABLE MANUFACTURER'S AS LISTED BELOW:

1. INLET & PIPE PROTECTION, INC. Naperville, IL 60564 847 722-0690
2. MARATHON MATERIALS, INC. Plainfield, IL 60544 800-983-9493

03.15.2016

GHA GEWALT HAMILTON ASSOCIATES, INC.

TREE PROTECTION FENCING DETAIL

NOTES:

1. EXISTING TREES TO BE PROTECTED SHALL HAVE SNOW FENCE INSTALLED AT THE DRIP LINE OF THE TREE TO PREVENT THE STOCKPILING OF EXCAVATED OR CONSTRUCTION MATERIALS UNDER THE TREE, AND PROHIBIT VEHICULAR TRAFFIC OR EXCESSIVE FOOT TRAFFIC WITHIN THE DRIP LINE.
2. SNOW FENCE SHALL BE WEBBED HDPE CONSTRUCTION FENCING, COLORED ORANGE AND SUPPORTED WITH STEEL "TEE" POSTS SET AT MAX. 15' INTERVALS, OR AS REQUIRED TO MAINTAIN THE FENCE IN AN UPRIGHT POSITION THROUGHOUT THE TERM OF CONSTRUCTION, IN CONFORMANCE WITH SECTION 201.05a OF THE HIGHWAY STANDARDS.
3. TREES THAT MAY BE DAMAGED BY CONSTRUCTION OPERATIONS SHALL BE REPAIRED OR REPLACED IN A MANNER ACCEPTABLE TO THE VILLAGE.

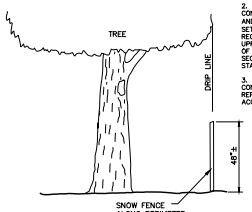

ELEVATION

03.15.2016

GHA GEWALT HAMILTON ASSOCIATES, INC.

WHEEL STOP

NOTES:

MATERIALS
1. WHEEL STOPS: PRECAST, 3.5% MINIMUM AIR-ENTRAINED CONCRETE; 4000 PSI MINIMUM COMPRESSIVE STRENGTH. EACH STOP SHALL BE REINFORCED WITH TWO NO.4 DEFORMED STEEL REINFORCING BARS, MINIMUM. PROVIDE CHAMFERED CORNERS AND DRAIN SLOTS ON UNDERSIDE, AND PROVIDE HOLES FOR DOWEL-ANCHORING TO SUBSTRATE.
2. ADHESIVE FOR ANCHORING STOPS TO PARKING STRUCTURE SLABS, AT-GRADE CONCRETE PAVEMENTS, EPOXY ADHESIVE MANUFACTURED FOR THE PURPOSE.
3. ADHESIVE FOR BONDING DOWEL TO WHEEL STOP: AS PROPOSED BY CONTRACTOR AND APPROVED BY ENGINEER, SUITABLE FOR APPLICATION.
4. STEEL BARS FOR INSTALLATION: GALVANIZED ⅝" STEEL DOWELS OR GALVANIZED NO. 5 STEEL REINFORCING BARS.

INSTALLATION
5. WHEEL STOPS TO BE CENTERED IN WIDTH OF PARKING STALL.
6. SECURELY ATTACH WHEEL STOPS INTO AT-GRADE CONCRETE WITH NOT LESS THAN TWO GALVANIZED STEEL DOWELS EMBEDDED IN HOLES CAST INTO WHEEL STOPS. FIRMLY BOND EACH DOWEL TO WHEEL STOP AND TO PAVEMENT.
7. AT CONCRETE PAVEMENT, DRILL HOLES IN PAVEMENT FOR DOWELS.
8. AT PARKING STRUCTURE SLABS, EPOXY TO SLAB.

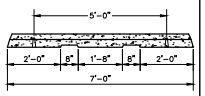

10.12.2018

GHA GEWALT HAMILTON ASSOCIATES, INC.

CONCRETE WASHOUT

NOTES

1. ACTUAL LAYOUT DETERMINED IN FIELD.
2. THE CONCRETE WASHOUT SIGN SHALL BE INSTALLED WITHIN 30 FT. OF THE TEMPORARY CONCRETE WASHOUT FACILITY.
3. CONCRETE WASHOUT SHOULD NOT BE ALLOWED IN STREET OR TO REACH A STORM WATER DRAINAGE SYSTEM OR WATERCOURSE.
4. CONCRETE WASHOUT AREA TO BE LOCATED AT LEAST 10' BEHIND CURB IF ADJACENT TO A PAVED ROAD.
5. CONCRETE WASHOUT DUMPSTER MAY BE USED IN LIEU OF CONSTRUCTION ONE AS DETAILED.

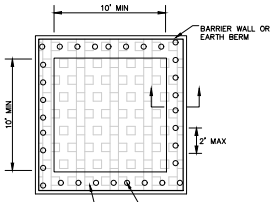

PLAN VIEW

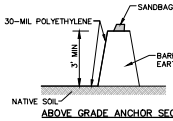

ABOVE GRADE ANCHOR SECTION

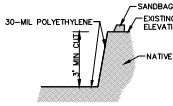

SUBGRADE ANCHOR SECTION

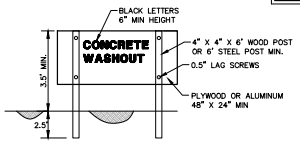

CONCRETE WASHOUT SIGN DETAIL (OR EQUIVALENT)

MAINTENANCE:

1. DRIED CONCRETE WASTE SHALL BE PICKED UP AND DISPOSED OF PROPERLY WHEN 75% OF CAPACITY IS REACHED.

08.14.2025

LOW PROFILE PRAIRIE SEED MIX

Species		Rate
Species	Common Name	PLS oz needed
(Grasses)		
Bouteloua curtipendula	Side-Oats Grama	16.00
Carex spp.	Prairie Sedge Species	4.00
Elymus canadensis	Canada Wild Rye	32.00
Koeleria macrantha	June Grass	1.00
Panicum virgatum	Switch Grass	1.00
Schizachyrium scoparium	Little Bluestem	36.00
	Total	**90.00**
Avena sativa	Common Oats	**512.00**
(Forbs)		
Amorpha canadensis	Lead Plant	0.50
Asclepias syriaca	Common Milkweed	2.00
Asclepias tuberosa	Butterfly Weed	2.00
Baptisia lactea	White Wild Indigo	2.00
Chamaecrista fasciculata	Partridge Pea	10.00
Coreopsis lanceolata	Sand Coreopsis	5.00
Dalea candida	White Prairie Clover	1.50
Dalea purpurea	Purple Prairie Clover	1.50
Desmanthus illinoensis	Illinois Sensitive Plant	3.00
Echinacea purpurea	Purple Coneflower	8.00
Eryngium yuccifolium	Rattlesnake Master	2.00
Lespedeza capitata	Round-Headed Bush Clover	2.00
Liatris aspera	Rough Blazing Star	0.50
Lupinus perennis v. occidentalis	Wild Lupine	3.00
Monarda fistulosa	Wild Bergamot	0.50
Oligoneuron rigidum	Stiff Goldenrod	1.00
Parthenium integrifolium	Wild Quinine	1.00
Penstemon digitalis	Foxglove Beard Tongue	0.50
Penstemon hirsutus	Hairy Beard Tongue	1.00
Ratibida pinnata	Yellow Coneflower	4.00
Rudbeckia hirta	Black-Eyed Susan	5.00
Ridbeckia subtomentosa	Sweet Black-Eyed Susan	1.00
Silphium laciniatum	Compass Plant	2.00
Solidago juncea	Early Goldenrod	0.25
Solidago speciosa	Showy Goldenrod	0.50
Symphyotrichum laeve	Smooth Blue Aster	1.00
Symphyotrichum novae-angliae	New England Aster	0.50
Symphyotrichum oolentangiense	Sky-Blue Aster	0.50
Tephrosia virginiana	Goat's Rue	1.00
Tradescentia ohiensis	Common Spiderwort	1.00
Verbena stricta	Hoary Vervain	1.00
Veronicastrum virginicum	Culver's Root	0.25

NOTES:

1. THICKNESS VARIES

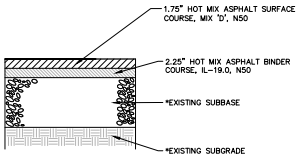

02.01.2021

GHA GEWALT HAMILTON ASSOCIATES, INC.

HMA RESURFACING DETAIL

NOTES:

1. SILT FENCE SHALL BE PLACED ON SLOPE CONTOURS TO MAXIMIZE PONDING EFFICIENCY.
2. INSPECT AND REPAIR FENCE AFTER EACH STORM EVENT AND REMOVE SEDIMENT WHEN NECESSARY. 9" (225mm) MAXIMUM RECOMMENDED STORAGE HEIGHT.
3. REMOVED SEDIMENT SHALL BE DEPOSITED TO AN AREA THAT WILL NOT CONTRIBUTE SEDIMENT OFF-SITE AND CAN BE PERMANENTLY STABILIZED.
4. FABRIC AND INSTALLATION SHALL MEET THE REQUIREMENTS OF ASSHTO STANDARD SPECIFICATION M-288-00.
5. SLICING METHOD IS PREFERRED.

PROPERTY	TEST PROCEDURE	
Grab Elongation		
Machine Direction	ASTM D-4533	123 lbs
X-Machine Direction	ASTM D-4833	101 lbs
Permittivity	ASTM D-4491	0.05 sec^{-1}
A.S.O.	ASTM D-4751	30 u.s. Sieve
UV Stability	ASTM D-4355	70%

1. SET POSTS AND EXCAVATE OR SLIT-TRENCH A 6-INCH DEEP TRENCH UPSLOPE ALONG THE LINE OF THE POST
2. ATTACH AASHTO GEOTEXTILE FILTER FABRIC TO EACH POST WITH A MINIMUM OF 3(THREE) FASTENERS PER POST AND EXTEND TO THE BOTTOM OF THE TRENCH. ACCEPTABLE FASTENERS INCLUDE STAPLES, ZIP-TIES, OR WIRE TIES.
3. BACKFILL AND COMPACT THE EXCAVATED SPOIL MATERIALS

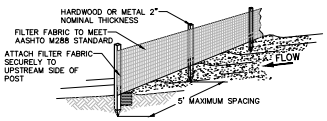

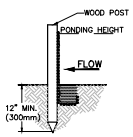

TRENCH INSTALLATION

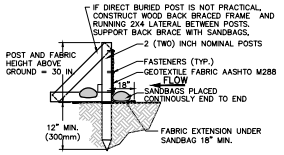

INSTALLATION WITHOUT TRENCHING

03.15.2016

GHA GEWALT HAMILTON ASSOCIATES, INC.

SILT FENCE INSTALLATION DETAIL

GHA GEWALT HAMILTON ASSOCIATES, INC.
625 Forest Edge Drive ■ Vernon Hills, IL 60061
TEL 847.478.9700 ■ FAX 847.478.9701

COPYRIGHT NOTICE
This drawing is the property of Gewalt-Hamilton Assoc., Inc. and is not to be used for any purpose other than the specific project and site named herein, and cannot be reproduced in any manner without the express written permission from Gewalt-Hamilton Associates, Inc.

DETAILS

PARKING LOT RENOVATIONS
FIRST UNITED METHODIST CHURCH OF ARLINGTON HEIGHTS
1903 E EUCLID AVENUE, ARLINGTON HEIGHTS, IL 60004

NO.	BY	DATE	REVISION

NO.	BY	DATE	REVISION

FILE: 6195.000-DT.dwg
DRAWN BY: JMB
DATE: 03.09.2026
GHA PROJECT #: 6195.000
CHECKED BY: MGFC
DATE: 03.09.2026
SCALE: N.A.
SHEET NUMBER: 8
OF 8 SHEETS

EXHIBIT C

Unconditional Agreement and Consent

TO: The Village of Arlington Heights, Illinois (*"Village"*):

WHEREAS, First United Methodist Church Arlington Heights (*"Owner"*) is the record title owner of that certain parcel of real property situated within the Village's R-3 One Family Dwelling District (*"R-3 District*"), located at the address commonly known as 1903 E. Euclid Avenue, Arlington Heights, Illinois (*"Property"*); and

WHEREAS, on _____, 2026, the President and Board of Trustees adopted Ordinance No. _____ (*"Ordinance"*), approving variations for the proposed improvement of the Property; and

WHEREAS, Section 8 of the Ordinance provides, among other things, that the Ordinance will be of no force or effect unless and until the Owner has filed, within 30 days after the passage of the Ordinance, its unconditional agreement and consent to accept and abide by each and all of the terms, conditions, and limitations set forth in the Ordinance; and

NOW, THEREFORE, the Owner hereby agrees and covenants as follows:

1. The Owner hereby unconditionally agrees to, accepts, consents to, and will abide by, each and all of the terms, conditions, limitations, restrictions, and provisions of the Ordinance.

2. The Owner acknowledges that public notices and hearings have been properly given and held with respect to the adoption of the Ordinance, has considered the possibility of the revocation provided for in the Ordinance, and agrees not to challenge any such revocation on the grounds of any procedural infirmity or a denial of any procedural right.

3. The Owner acknowledges and agrees that the Village is not and will not be, in any way, liable for any damages or injuries that may be sustained as a result of the Village's granting of the variations for the Property or its adoption of the Ordinance, and that the Village's approvals do not, and will not, in any way, be deemed to insure the Owner against damage or injury of any kind and at any time.

4. The Owner hereby agrees to hold harmless and indemnify the Village, the Village's corporate authorities, and all Village elected and appointed officials, officers, employees, agents, representatives, and attorneys, from any and all claims that may, at any time, be asserted against any of such parties in connection with the Village's adoption of the Ordinance granting the variations for the Property.

Dated: _____, 2026

ATTEST:

By: _____

Its: _____

FIRST UNITED METHODIST CHURCH ARLINGTON HEIGHTS

By: _____

Its: _____

VILLAGE OF ARLINGTON HEIGHTS

STAFF DEVELOPMENT COMMITTEE REPORT

Temp File Number: *PC25-025*
Project Title: *First United Methodist Church*
Address: *1903 E. Euclid Avenue*
PINs: *03-28-301-021-0000*

To: *Plan Commission*
Prepared By: *Dan Osoba, Planner II*
Meeting Date: *April 22, 2026*
Date Prepared: *April 16, 2026*

Petitioner: *Dan Buntley*
Address: *First United Methodist Church*
1903 E. Euclid Avenue
Arlington Heights, IL 60004

Existing Zoning: *R-3 One Family Dwelling District*
Comprehensive Plan: *Institutional*

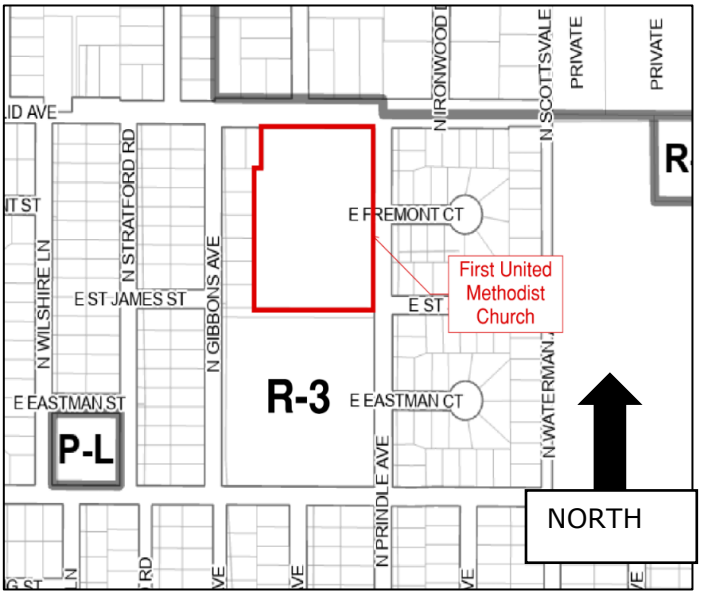

SURROUNDING LAND USES

Direction	Zoning	Existing Land Use	Comprehensive Plan
North	R-E One Family Dwelling District	Single-Family Detached	Single-Family Detached Estate
South	R-3 One Family Dwelling District	Methodist Park	Parks
East	R-3 One Family Dwelling District	Single-Family Detached	Single-Family Detached
West	R-3 One Family Dwelling District	Single-Family Detached	Single-Family Detached; Institutional

Requested Action:

1. Variation from Chapter 28, Section 5.1-3.3(b) to allow a side setback of 30.5-feet where 43.2-feet is required.
2. Variation from Chapter 28, Section 10.2-12.4 to allow parking wheel stops where a curb is required in accordance with prescribed engineering standards.
3. Variation from Chapter 28, Section 10.4-4 to allow 235 parking spaces where 320 parking spaces are required.

Project Background:
The 6.6-acre subject property is located at the southwest corner of E. Euclid Avenue and N. Prindle Avenue at 1903 E. Euclid Avenue. The existing land use is a place of worship, which is a permitted land use within the R-3 District. The site includes 217 off-street parking spaces accessible from one entrance on E. Euclid Avenue and two entrances on N. Prindle Avenue.

The property obtained approval of a Planned Unit Development (PUD) for building additions, parking lot reconfiguration, landscaping, a land use variation for a day care, and a parking variation to reduce the minimum number of parking stalls from 497 to 274 spaces in 2008 (Ord. 09-044). However, this PUD expired as building permits were never issued for those PUD improvements. In addition, the property was rezoned to R-3, re-designated to Institutional in the Comprehensive Plan and subdivided to create six new single-family residential lots along N. Gibbons Avenue. The First United Methodist Church retained ownership of the northernmost lot for parsonage.

The Petitioner is proposing to reconfigure the existing parking lot to provide a 30.5-foot setback from the western property line, modify existing angled stalls to 90-degree stalls, and update the parking lot paving. As shown on the Petitioner's proposal, the site would have 235 off-street parking spaces and additional landscape buffering between the single-family homes to the west. A parking variation is required to reduce the required off-street parking from 320 spaces to 235, a variation to waive the requirement for curbing and replace it with wheel stops, and a variation to reduce the required side setback form 43.2-feet (10% of the lot width) to 30.5-feet.

Zoning and Comprehensive Plan
The property is currently zoned R-3 One Family Dwelling District which allows Places of Worship as a permitted land use. The proposal does not include any modification to the existing building or land use other than off-street parking, which requires a variance. The Petitioner provided a written response to the four criteria for approval for variations for each variation requested:

- **The proposed use will not alter the essential character of the locality and will be compatible with existing uses and zoning of nearby property.**
- **The plight of the owner is due to unique circumstances, which may include the length of time the subject property has been vacant as zoned.**
- **The proposed variation is in harmony with the spirit and intent of this Chapter 28.**
- **The variance requested is the minimum variance necessary to allow reasonable use of the property.**

The Comprehensive Plan designates the property as appropriate for Institutional land uses. The existing use is consistent with the institutional designation and the proposed parking lot reconfiguration will not make the site inconsistent with the Comprehensive Plan.

Site Improvements & Landscaping
The proposed site modifications will remove a row of parking along the western property line to create a larger landscape buffer and reconfigure parking stalls within the rest of the lot to provide additional spaces. The Petitioner provided a detailed and scaled site plan that demonstrates compliance with parking stall widths and adjacent drive aisle widths.

Landscaping is provided adjacent to the parking to screen the lot from adjacent properties the adjacent rights-of-way. A six-foot-tall double row of landscaping is provided adjacent to the parking lot and between residential properties within the new 30-foot buffer area. Additional trees have been provided in existing parking lot islands that do not have trees and new islands in compliance with parking lot landscaping requirements.

The SDC is supportive of the variance request to reduce the side setback requirement from 43.2-feet to 30.5-feet on the western side of the property. The existing buffer is non-existent and providing a 30.5-foot buffer will not alter the character of the locality and is closer to the spirit and intent of Chapter 28 by providing a buffer with landscape screening between the uses. The petitioner provided letters of support for the proposal that are included in the Plan Commission agenda packet.

Parking and Traffic:
The petitioner provided a detailed parking study that included a parking survey of existing parking demand that identified a typical Sunday will incur approximately 121 vehicles parked. For Christmas, Martin Luther King Sunday, and Easter, the parking lot had 189, 185 and 230 vehicles parked in the lot, respectively. Additional surveys were completed on several weekdays and a Saturday in 2025 from 7:00 am to 9:00 pm to evaluate the usage outside of Sunday mornings. The study found that on non-Sundays, the parking lot had a maximum usage of 69 spaces on a Friday that included children's performances and a funerial service. The study found, and the SDC agrees, that the 235 proposed parking spaces on the property will adequately serve the operations of the church based on the current parking demand, which is not changing with this proposal. The SDC is in support of this variation request to reduce the required parking spaces from 320 spaces to 235.

The off-street parking code requirements are shown in the table below:

Use	Seats	Square-Footage	Occupancy	Employees / Classrooms	Parking Ratio	Required Parking
Assembly	489	N/A	N/A	N/A	1 space per 5 seats	98
Multi-Use	N/A	N/A	646	N/A	30% of occupancy	194
Classroom	N/A	N/A	N/A	18 / 9	1 per employee plus 1 per 5 classrooms	21
Office	N/A	2,270	N/A	N/A	1 per 300 s.f.	8
Total						320
			Total Existing			231
			Total Proposed			**235**
			Surplus / (Deficit)			**(85)**

The petitioner is requesting approval of a variation from Chapter 28, Section 10.2-12.4 to waive the requirement to provide curbing in parking areas that have five or more spaces. The existing parking lot does not contain curbing. The petitioner intends to mitigate this request by providing parking wheel stops or parking blocks where there is no curbing to reduce the project cost while maintaining a safe design. The engineering division evaluated this request and is supportive of it as the request will not change the essential character of the locality as there are no curbs in place currently. Additionally, the parking blocks maintain the spirit and intent of the code by providing a barrier that is utilized in other locations in the Village. The request is the minimum necessary to allow a reasonable use of the property by bringing the parking more in compliance with the intent of code to provide a safe parking area. The access drive at the south of the site is proposed to be re-striped as a one-way drive from east to west. This was reviewed by the SDC and determined to be a safe and efficient means of vehicular access to the adjacent 90-degree and parallel parking spaces.

RECOMMENDATION
The Staff Development Committee (SDC) reviewed the proposed parking lot reconfiguration and variances to reduce required side yard setback for the property from 43.2-feet to 30.5-feet, waive the requirement for curbing of the parking lot and to reduce the required off-street parking from 320 spaces to 235 spaces at 1903 E. Euclid Avenue, and is recommends **APPROVAL** of the application subject to the following conditions:

1. The new green space adjacent to the parking lot shall be graded to direct runoff to the south such that the runoff is directed to the existing detention basin. The petitioner shall provide detailed grading plans with the Building Permit to demonstrate compliance with this condition.
2. Future expansions of the place of worship at this location will require re-evaluation of the required parking spaces.
3. The petitioner shall comply with all Federal, State, and Village Codes, Regulations, and Policies.

APPROVED

MINUTES OF THE MEETING OF
CONCEPTUAL PLAN REVIEW COMMITTEE
COMMUNITY ROOM, VILLAGE OF ARLINGTON HEIGHTS
August 13, 2025 AT 6:30 P.M.

MEMBERS PRESENT:
Bruce Green, Chair
Jay Cherwin
Kristen Schurtz
John Sigalos

MEMBERS ABSENT:

STAFF PRESENT: Michael Lysicatos, Rachel Hitzemann & Dan Osoba

ALSO PRESENT: John Panlorvo, J & J Paving & Dan Buntley, Church Trustee

---

Call to Order
Chairman Green called the meeting to order at 6:30 p.m.

Approval of Minutes
The meeting minutes of July 23, 2025 meeting were reviewed.

SIGALOS MOVED AND CHERWIN SECONDED A MOTION TO APPROVE THE July 23, 2025 MEETING MINUTES. MINUTES WERE APPROVED 4-0.

NEW BUSINESS

T1888 – 1903 E. Euclid Ave – First United Methodist Church

The 6.6-acre subject property is located at the southwest corner of E. Euclid Avenue and N. Prindle Avenue at 1903 E. Euclid Avenue. The existing land use is a place of worship, which is a permitted land use within the R-3 District. The site includes 231 off-street parking spaces accessed from one entrance on E. Euclid Avenue and two entrances on N. Prindle Avenue.

The property obtained approval of a Planned Unit Development (PUD) for building additions, parking lot reconfiguration, landscaping, a land use variation for a day care, and a parking variation to reduce the minimum number of parking stalls from 497 to 274 spaces in 2008 (Ord. 09-044). However, this PUD expired as building permits were never issued for those PUD improvements. In addition, the property was rezoned to R-3, re-designated to Institutional in the Comprehensive Plan and subdivided to create six new single-family residential lots along N. Gibbons Avenue. The First United Methodist Church retained ownership of the northernmost lot for parsonage.

The Petitioner is proposing to reconfigure the existing parking lot to provide a 30-foot setback from the western property line, modify existing angled stalls to 90-degree stalls, and provide 22 land-banked parking stalls at the southeast corner of the site that were previously identified on the former PUD approval. As shown on the Petitioner's proposal, the site would have 273 off-street parking spaces and additional landscaping between the single-family homes to the west. A parking variation is required to reduce the required off-street parking from 320 spaces to 261, which includes a 12-space reduction from the proposal to account for required landscape islands (see the Parking section for details) and a variation to reduce the required side setback form 43.2-feet (10% of the lot width) to 30-feet.

Mr. Buntley explained that one third of parking lot needs to be replaced. We would like to

change the impervious surface and add to the green space. A drawing was provided, proposing to convert about 30 feet width of that parking space and turn that into green space. Planting trees, bushes, and prairie grass which will create a buffer between the parking lot the neighbors. Nothing else is changing, everything is remaining the same in terms of its elevation we're not changing anything from a sewer perspective, etc. The proposal that has been created meets the same number of parking spaces that we have today, we are not decreasing the number of parking spaces available to meet the needs of the church. There was concern from staff on the parking near the retention, so the plan now shows that it will be a one-way egress. A parking study was provided. A variety of events and peak Sundays where recorded. A landscaping plan was also provided. The six neighbors to the west provided statements of approval for the project.

Mr. Osoba communicated the above stated project overview. New plans were not in the packet but provided earlier in the week and have been printed for review. SDC has not formally review these new plans, but will provide additional comments back to the petitioner prior to the Planning Commission application. Staff is generally supportive of the application subject to the items listed in the staff report and discussed at this meeting.

Commissioner Schurtz glad you have approached the neighbors, so I agree they will like the green space.

Commissioner Cherwin yes, I agree it is a good plan. Not concerned with the number of parking spaces per the plans, and do not feel a parking study is necessary for a church or school.

Mr. Buntley can the requirement for an actual engineer of the parking studies be waived?

Mr. Osoba you can request that; staff is going to want to review the details of your findings with the Plan Commission application.

Commissioner Sigalos inquired about the location of the 19 landbanked spaces. What about the landscape islands that we require for every 20 parking spaces. Also, appreciates the green space.

Mr. Osoba those are currently angled spaces, we would recommend that those be 90-degree spaces for you to have more spaces towards the total needed, thus reducing the variance. We would require landscape islands.

Commissioner Green agreed this is a win for the neighbors. Please proceed with your application.

PUBLIC COMMENT
None

Adjournment
CHERWIN MOVED AND SIGALOS SECONDED THE MOTION TO ADJOURN. ALL MEMBERS VOTED IN FAVOR OF THE MOTION.

The meeting adjourned at 6:46 p.m.

Bruce Green, Chair
CONCEPTUAL PLAN REVIEW COMMITTEE
Kendra Maher, Recorder

PLAN
_____
_____
_____

REPORT OF THE PROCEEDINGS OF A PUBLIC HEARING
BEFORE THE VILLAGE OF ARLINGTON HEIGHTS
PLAN COMMISSION

COMMISSION

RE: 1903 EAST EUCLID AVENUE - FIRST UNITED METHODIST CHURCH - PC #25-025
VARIATIONS

REPORT OF PROCEEDINGS had before the Village of

Arlington Heights Plan Commission Meeting taken at the Arlington Heights Village

Hall, 33 South Arlington Heights Road, 3rd Floor Board Room, Arlington Heights,

Illinois on the 22nd day of April, 2026 at the hour of 7:30 p.m.

DRAFT

MEMBERS PRESENT:

JAY CHERWIN, Chairperson
MICHAEL PETERMANN
JOE LORENZINI
BRUCE GREEN
JOHN SIGALOS
SUSAN DAWSON

ALSO PRESENT:

DAN OSOBA, Planner II
RACHEL HITZEMANN, Planner II
MICHAEL LYSICATOS, Community Development Assistant Director

(Gavel banged.)

CHAIRPERSON CHERWIN: We'll bring the meeting to order and we'll do the Pledge of Allegiance.

If we could all rise?

(Pledge of Allegiance recited.)

CHAIRPERSON CHERWIN: Thank you.

All right, our friends with the Staff, if you could do a roll call, that would be great.

MS. HITZEMANN: Yes.

Commissioner Dawson.

COMMISSIONER DAWSON: Here.

MS. HITZEMANN: Commissioner Drost.

(No response.)

MS. HITZEMANN: Commissioner Ennes.

(No response.)

MS. HITZEMANN: Commissioner Green.

COMMISSIONER GREEN: Here.

MS. HITZEMANN: Commissioner Lorenzini.

COMMISSIONER LORENZINI: Here.

MS. HITZEMANN: Commissioner Petermann.

COMMISSIONER PETERMANN: Here.

MS. HITZEMANN: Commissioner Schurtz.

(No response.)

MS. HITZEMANN: Commissioner Sigalos.

COMMISSIONER SIGALOS: Here.

MS. HITZEMANN: Chairman Cherwin.

CHAIRPERSON CHERWIN: Here.

Thank you. All right, we do have a quorum so we will proceed.

Our first item on the agenda is approval of minutes from 4/8/26.

Is there a motion to approve?

COMMISSIONER GREEN: I'll make that motion.

COMMISSIONER SIGALOS: And I'll second.

CHAIRPERSON CHERWIN: All in favor?

(Chorus of ayes.)

COMMISSIONER DAWSON: I abstain; I wasn't present.

CHAIRPERSON CHERWIN: Okay, any opposed?

(No response.)

CHAIRPERSON CHERWIN: All right, motion passes. Thank you.

All right, we have Item IV. Public Hearings, A. 1903 East Euclid Avenue, First United Methodist Church. We've got a public hearing for that.

So, Staff, on that petition, have all the public notices been given?

MR. OSOBA: Yes, they have.

CHAIRPERSON CHERWIN: All right, Dan, thanks.

We'll ask the Petitioner, if you could please, whoever is going to speak on behalf of the Petitioner, if you could step up, recite your name into the microphone for the record, please?

MR. BUNTLEY: Sure. Dan Buntley.

CHAIRPERSON CHERWIN: Thank you, Dan. Would you raise your right hand? I'm going to swear you in here.

(Witness sworn.)

CHAIRPERSON CHERWIN: All right, thank you, sir. There's a Staff report that went along with this. Did you read that, and did you see that there are conditions at the end of that? My question to you is do you agree with all those conditions?

MR. BUNTLEY: I do.

CHAIRPERSON CHERWIN: All right, thank you. You can go ahead and get started with your presentation, and then once you get done, we'll have the Staff go. Then, during the Staff presentation, you can go ahead and take a seat and then we'll come back with questions, all right?

MR. BUNTLEY: Fantastic.

CHAIRPERSON CHERWIN: So, thanks for coming. Why don't you go ahead and get started with your presentation? We can see everything on our screens that you can see up there.

MR. BUNTLEY: Okay, great. Well, good evening. My name is Dan Buntley; I am a trustee at First United Methodist Church. John Pancorvo, he is the owner of J&J Pavement, he is going to be executing this project for us.

So, tonight we're going to talk about, here's the agenda. I'm going to do a really brief overview of FUMCAH, which stands for First United Methodist Church of Arlington Heights. We'll go over our project summary. We'll share about the landscaping plans, the parking study, MWRD letter, and our neighborhood affidavit.

All right, so just real briefly, a summary on First United Methodist Church. We've been part of the community for a very, very long time. We have actually been in our current location at 1903 for a little over 70 years. We have our worship service on Sunday. We run a preschool program, and we have a lot of other activities at our church. You can see our mission there.

One of the things I want to call out is our dedication to sustainability and environmental stewardship. You can see the list of things. We've had a green team in existence for a little over 10 years. You can see some of the things that we've done. We've converted to LED lighting, eliminating single-use plastics. We have a recycling program, and we do quite a bit of composting, both with our landscaping materials as well as our food waste compost. So, we're very aligned with the mission at the Village here in terms of sustainability.

So, one of the things that I wanted to get across with this project is it's not just a simple parking lot replacement project. We're actually challenging ourselves to try to make it a little more green. That's what all prompted this project is not just replace the existing parking lot that we have but how do we reduce the amount of impervious square feet that we have and replace it with some greenery and be a little more sustainable for the environment, okay?

Here is an overhead view of our property, and you can see highlighted in the red area, that is what we call the west parking lot. That's the area that we're going to be replacing, and you can see it's adjacent to the six homes just west of there. That's the area in question if you will, that's our project scope if you will, okay?

So, now let's talk about the site plan, and we have three variance requests that I will walk and work through. So, you can see on the left-hand side the gray-shaded

area, that is our existing parking lot. That's the area that we're going to actually be replacing. You can see in the far left, the double-cross hatched area, that's actually the area that we're going to be turning into a green space. So, 30 feet wide by 270 feet long, we're swapping out asphalt for green space, and I'll talk a little bit more about that coming up.

But you can see in the existing construction area, we're going to be adding some parking spaces along that western half. We're going to be adding the two islands in that new parking space. You can see just to the east of it, to the right of that, we're adding two parking, sorry, two islands on the existing parking lot as well.

The other aspect on the southernmost part of the property, we're adding 10 parallel parking spaces. Again, our idea is we're trying to maximize the amount of parking spaces to make sure that we're as close to the Village Code as possible while trying to add as much greenery and green space as possible as well. So, there's a little bit of a balancing act that we're trying to do here, meeting all the various requirements.

So, now let's go through the three variance requests that we have. The first one is west setback variance. So, you can see in the green space that we're adding, so today, our setback today is six inches. So, our parking lot literally goes up to six inches away from that setback, and so we are now adding 30 more feet to that setback by adding this green space. So, we're going to have 30.5 feet of setback where the variance, or sorry, the requirement is 43.2 feet. So, we're closing the gap by adding this green space and that's the variance that we're asking for, is to approve that extension of that green space and having a 30.5-foot variance for that setback, okay?

The next variance request that we have is a curb variance request. So, the requirement is, along this western edge and the northern edge of our construction area, is to have a curb that helps prevent, you know, accidental cars from driving into the backyards of our neighbors or into our grassy area. The variance request that we're requesting is to use parking blocks. It's very common throughout, you can see on this next slide, many businesses, many organizations use parking blocks throughout the Village. So, we're hoping that that is something that's acceptable to meet the requirement while also trying to manage the cost of this project because the use of parking blocks is much more cost effective than it is for using curbs. Being a non-profit organization, it's very challenging in terms of trying to fund something, a project like this without trying to manage the cost. So, that's our second variance request that we're asking.

The third variance request is the number of parking spaces. So, according to the requirements of the size of our building, we are required to have 320 parking spaces. In this plan, we are providing 235 parking spaces, and we've done two different parking studies that I'll share with you now.

So, the first study that we did was looking at all of our different types of events that we have, even when we don't have any events, what does our parking lot usage look like? So, you can see in the various columns, we looked at when preschool was in session, so when parents are dropping off or picking up their kids from preschool, we have a children's performance, we have a funeral, we have another play or a performance. You can see all the different numbers here and the largest number highlighted in yellow there in the middle of your screen is 69. So, Monday through Saturday, the most number of parking spots that have been used is 69, and again, so that's far less than the 235 that this plan calls for.

But we're a church. So, on Sundays, obviously we use, you know, the parking lot the most on Sundays. So, we did a year-long study and counted the number of

cars in our parking lot every single Sunday for an entire year, and you can see the graph there. You know, roughly speaking, we are averaging somewhere in the neighborhood of 125 to maybe 150 cars on any given Sunday. There are sort of three special Sundays throughout the year that we're a little busier than normal--Christmas, Easter, and MLK Day. You can see, you know, the maximum that we saw during our study was 230, and again, just a reminder, this plan shows 235 parking spaces. So, we feel very strongly, based upon the data that we've collected, that the number of parking spaces that this plan offers will meet the needs of the congregation, okay?

Let's talk about landscaping. Again, one of the main purposes of doing this project is to try add more green space. So, on the left-hand side again is where our construction area is. You can see, on the right-hand side, I summarized all the different aspects of our landscaping plan. So, we have a number of four-inch diameter trees in all the islands and in the green space. We have a row of six-foot tall evergreens along that western edge between us and our neighbors.

In that green space, we're planning on putting in low maintenance prairie grass and shrubs. So, again, this is not just a lawn. We don't want to have to mow it and take care of it. We want this to be a native prairie glass place. We'll also, this green space is going to be pitched just like the parking lot is today, so the pitch will be that water will run to the south which is where we have our detention pond. We'll have evergreens in between the existing trees along that southern edge where we have that parallel parking. So, again, there's going to be a very nice visual barrier between those parallel parking spaces and the grass that's just south and adjacent to those parking spaces.

So, we feel like this is going to be a really nice, you know, addition. One of the reasons why our neighbors are so excited about this project is, you know, if you imagine you were one of these neighbors looking at your back window and all you saw was this big, huge parking lot, once this plan gets put into place and these trees and bushes mature, it's going to completely transform their view and it's going to be much nicer with this landscaping.

MWRD determination letter. So, we shared our plans with the Reclamation District, and the response we had was, because we're not doing anything with the sewer system, it's a small project, we're not changing anything with our detention pond, they said no permit is required. They said there's nothing that we need to do specifically to meet any of their requirements. So, that's that.

Then, the neighborhood affidavit and notifications. So, again, I spoke to the six neighbors just west of our parking lot, and we spoke to every one of them and all of them signed in agreement that they love the idea, they're looking forward to it, they wished this would have happened a year ago. So, they keep asking me, Dan, when is this going to happen, when is this going to happen. So, they're very excited about it and they really can't wait until we get going on this.

Then, just the notification process. So, you know, we sent out notifications to all the neighbors in the red, you know, 65 neighbors in all. Obviously, we had our public hearing signs, et cetera, et cetera. So, we met all the notification requirements.

Okay, thank you.

CHAIRPERSON CHERWIN: Thank you, sir. Well done. You can go ahead and have a rest. We'll turn it over to our friend Dan for the Staff report.

MR. BUNTLEY: Okay.

CHAIRPERSON CHERWIN: Take it away, Dan.

MR. OSOBA: All right, the petition tonight is for First United Methodist

Church which is located at 1903 East Euclid Avenue. The property is zoned R-3 One-Family Dwelling District and designated as appropriate for Institutional uses in the Comprehensive Plan. The site is developed as a place of worship, which is a permitted use in the R-3 District, and has site access off of an entrance on Euclid and two entrances off of Prindle Avenue. The green space south of the site is, as mentioned, an on-site detention basin adjacent to Methodist Park just to the south of the property.

This is, the project scope shown on the slide overlaid on top of an aerial image shows the parking lot re-striping, the new parking lot islands, and the increased landscape buffer along that western property boundary from those residential properties. Based on that scope of work, the three variances that are requested as part of this application are:

1. Variation from Chapter 28, Section 5.1-3.3(b) to allow that side setback of 30.5 where 43.2 feet is required based on the 10 percent of the lot width;
2. Variation from Chapter 28, Section 10.2-12.4 to allow parking wheel stops where a curb is required in accordance with prescribed engineering standards; and
3. Variation from Chapter 28, Section 10.4-4 to allow 235 parking spaces where 320 parking spaces are required.

The side setback variation is shown in green on the western border. The SDC is supportive of this variation request which will provide an additional buffer where there is no buffer currently. Additionally, the Petitioner proposes increased landscaping to further screen the properties from the adjacent parking lot.

The variance to waive the parking, or excuse me, the requirement for a curb in the parking lot has been also reviewed by the SDC and found acceptable. The existing condition of the parking lot does not have curbing in it, so it would not change the character of the locality. The parking wheel stops proposed by the Petitioner will ensure the safety of the vehicles in lieu of those curbs as well.

Lastly, the Petitioner provided information on the use of the church as it relates to parking and provided a parking study with this petition. The code-required parking for this use is 320 spaces where only 235 are proposed. The parking study provided indicates that the maximum demand on the parking lot is 230 vehicles on Easter Sunday and, as was mentioned, during typical church operations, the maximum parking lot demand that was surveyed is 69 spaces. So, the SDC reviewed this request and is also in support of this request.

These are the criteria for approval for variations.

The Staff Development Committee reviewed the proposed parking lot reconfiguration and variances to reduce the required side yard setback for the property from 43.2 feet to 30.5 feet, waiving the requirement for curbing at the parking lot, and reduce the required off-street parking from 320 spaces to 235 spaces at 1903 East Euclid Avenue, and it recommends approval of the application subject to these three conditions listed in the slide and on the Staff report. Thank you.

CHAIRPERSON CHERWIN: Thank you, Dan.

All right, is there a motion to include that report into the public record?

COMMISSIONER GREEN: I'll make a motion.

COMMISSIONER DAWSON: Second.

CHAIRPERSON CHERWIN: All in favor?

(Chorus of ayes.)

CHAIRPERSON CHERWIN: Any opposed?

COMMISSIONER DAWSON: No.

CHAIRPERSON CHERWIN: Motion passes. So, it will be included in the public record. Thanks.

Initial questions from Plan Commissioners? Michael, we'll start with you.

COMMISSIONER PETERMANN: No questions.

CHAIRPERSON CHERWIN: No questions.

Joe?

COMMISSIONER LORENZINI: No.

CHAIRPERSON CHERWIN: Bruce?

COMMISSIONER GREEN: I just, since we had a recent meeting in relation to prairie grasses, and I just wondered what, you know, that whole topic was covered pretty heavily. I think --

CHAIRPERSON CHERWIN: Mr. Buntley, could you step up real quick?

MR. BUNTLEY: Yes, sure.

CHAIRPERSON CHERWIN: Do you want to ask what went into that decision?

COMMISSIONER GREEN: Yes, I think, yes, where do the prairie grasses come from? In other words, we had a big discussion a couple of meetings back or whenever it was, about the look of prairie grasses and it looks in some cases awful, and I tend to agree with that. Just because they might be native to this State of Illinois --

CHAIRPERSON CHERWIN: I don't think they said awful; I think it was terrible was the word they used.

COMMISSIONER GREEN: It was terrible, okay, it was terrible, excuse me, not awful. I exaggerate, sorry. But it just raised the question that, I understand that you don't have to mow this stuff, and it's a great improvement, I'm sure the neighbors love the fact that there's just no asphalt right there --

MR. BUNTLEY: Yes.

COMMISSIONER GREEN: -- and I get all that, and that is a wonderful thing. But you just, I'm a little bit hesitant to say, yes, hurray, prairie grass, because it sometimes doesn't look that good.

MR. BUNTLEY: Yes, I'm not a landscaper. I don't know if the term prairie grass is the correct term, but it's very common in many industrial areas, in my office complex as an example. Many, many companies are trying to reduce the amount of grass, you know, traditional lawn that they have to maintain.

COMMISSIONER GREEN: I get the maintenance thing, but --

MR. BUNTLEY: Okay.

COMMISSIONER GREEN: -- it's just that when it's in your backyard, and you've seen them, I've seen them, that they're overgrown and they're not the most --

CHAIRPERSON CHERWIN: Well, in this, can I just add to your --

COMMISSIONER GREEN: Yes.

CHAIRPERSON CHERWIN: So, Dan, on the left side, you have this row of, are those like arborvitaes or what is that on the left towards the houses?

MR. BUNTLEY: Correct.

CHAIRPERSON CHERWIN: Those will be about a couple of feet high, right?

MR. BUNTLEY: They're required to be six feet high as planted.

CHAIRPERSON CHERWIN: As planted, six feet high.
MR. BUNTLEY: And they're going to grow upwards to 15 to 20 feet tall and anywhere from six to 10 feet wide.
CHAIRPERSON CHERWIN: I mean, so at the end of the day, you know, the neighbors, you know --
MR. BUNTLEY: They're not going to see it.
COMMISSIONER GREEN: The people that go to your church might not like the look of it. In other words, if you're on the other side of the arborvitae, then the patrons are going to be looking at prairie grass that might need to be groomed. So, I'm just, we had a big discussion of it and, you know, it's not a code requirement as I recall. It's just really, is it a recommendation or, you have to submit a landscaping plan to the Village to approve.
CHAIRPERSON CHERWIN: I think the Village prefers, doesn't the Village prefer --
MR. LYSICATOS: Through the Chair, we actually just adopted our sustainability plan.
CHAIRPERSON CHERWIN: Yes.
MR. LYSICATOS: Last night at the Village Board meeting, and a lot of these techniques are used, one, to less mowing which is less greenhouse gases, they're more sustainable, they tend to thrive in these environments. I think one of the key elements with any of these plantings is maintenance, if they're maintained properly. If you let them go long periods --
COMMISSIONER GREEN: Oh, no, I get it. There's a cost involved in cutting grass, I get it. I get it.
MR. LYSICATOS: Yes, and I think some of the examples that you saw on the previous request were some of the wet bottom basins which can make, even introduce another challenge to maintaining those types of plantings.
COMMISSIONER GREEN: To get anything to grow in a wet bottom, yes.
MR. LYSICATOS: Correct, and getting in there and doing the maintenance isn't quite as easy as the access that they'll have in this setting where you tend to see them maintained a lot more regularly.
COMMISSIONER GREEN: Okay, I'm just going to bring it up because we were just discussing it.
MR. LYSICATOS: Okay, yes. I'm just adding a point of clarification.
COMMISSIONER GREEN: It sounds like you guys have approved it, so if we don't like it, we're going to blame it on you guys.
MR. BUNTLEY: Yes, and our landscaping company is very familiar with how to maintain this type of thing that we're talking about with prairie grass. So, you know, I'm confident at the beginning of the season, at the end of the season, it will be maintained and look nice.
COMMISSIONER GREEN: Beautiful, that's all we got to hear.
MR. BUNTLEY: Great.
COMMISSIONER GREEN: No more questions.
CHAIRPERSON CHERWIN: And the mosquitoes will love it.
COMMISSIONER GREEN: There you go.
CHAIRPERSON CHERWIN: Sue?
COMMISSIONER DAWSON: No questions.
CHAIRPERSON CHERWIN: John?

COMMISSIONER SIGALOS: I just have a question on the existing islands, the parking islands that we see to the right.

MR. BUNTLEY: Yes.

COMMISSIONER SIGALOS: Will those have trees in them? Are those code compliant? They're not shown on the drawing but there are trees there?

MR. OSOBA: Yes. They are not touching those landscape islands, so those aren't shown, buy --

COMMISSIONER SIGALOS: Right.

MR. OSOBA: -- yes, there are landscape trees in those islands.

COMMISSIONER SIGALOS: Okay, I see we're adding trees to those diagonal parking stalls at the islands.

MR. BUNTLEY: Yes.

COMMISSIONER SIGALOS: Okay, no, I have no other questions. I think it's fine.

CHAIRPERSON CHERWIN: Okay, well, this is a public hearing, so why don't we open it for public comments on this matter?

Sir, anything on this matter? No? Anybody else?

I don't see anybody else with any, nobody else hiding under the chairs? Okay, so we will close the public hearing, or close the public comments I should say.

Any final deliberation? Do we want a final, any other follow-up or does anybody want to make a motion on that?

COMMISSIONER GREEN: No, I would like to make a motion.

A motion to recommend to the Village Board of Trustees <u>approval</u> of First United Methodist Church's petition, PC #25-025, for the following variations:

1. **Variation from Chapter 28, Section 5.1-3.3(b) to allow a side setback of 30.5 feet where 43.2 feet is required;**
2. **Variation from Chapter 28, Section 10.2-12.4 to allow parking wheel stops where a curb is required in accordance with prescribed engineering standards; and**
3. **Variation from Chapter 28, Section 10.4-4 to allow 235 parking spaces where 320 parking spaces are required.**

This recommendation is subject to the following conditions:

1. **The new green space adjacent to the parking lot shall be graded to direct runoff to the south such that the runoff is directed to the existing detention basin. The Petitioner shall provide detailed grading plans with the building permit to demonstrate compliance with this condition.**
2. **Future expansions of the place of worship at this location will require reevaluation of the required parking spaces.**
3. **The Petitioner shall comply with all federal, state, and Village codes, regulations and policies.**

CHAIRPERSON CHERWIN: Thank you. Is there a second?

COMMISSIONER SIGALOS: I'll second.
CHAIRPERSON CHERWIN: All right, there is a motion on the table. Could we do a roll call vote, please?
MS. HITZEMANN: Yes.
Commissioner Dawson.
COMMISSIONER DAWSON: Yes.
MS. HITZEMANN: Commissioner Green.
COMMISSIONER GREEN: Yes.
MS. HITZEMANN: Commissioner Lorenzini.
COMMISSIONER LORENZINI: Yes.
MS. HITZEMANN: Commissioner Petermann.
COMMISSIONER PETERMANN: Yes.
MS. HITZEMANN: Commissioner Sigalos.
COMMISSIONER SIGALOS: Yes.
MS. HITZEMANN: Chairman Cherwin.
CHAIRPERSON CHERWIN: Yes.
All right, the motion passes.
Congratulations. As you know, we are a recommendation body, so your next step will be to go to the Village. Our friends here, Dan, will shepherd you through to the next step, but congratulations and good luck with your project.
MR. BUNTLEY: Great. Thank you very much for your time.
CHAIRPERSON CHERWIN: All right, nice job on the presentation to you, Dan.
COMMISSIONER PETERMANN: Yes, well done. Very well done.
CHAIRPERSON CHERWIN: Great, all right. So, let's see. Other business, do we have anything else, guys? No, anything?
(No response.)
CHAIRPERSON CHERWIN: All right, so we'll open up to public comment.
No public comment on this?
(No response.)
CHAIRPERSON CHERWIN: All right, update on previous Plan Commission cases. Do we have, I don't see anything here.
MS. HITZEMANN: We do not have an update for this time. We'll have one for next time.
CHAIRPERSON CHERWIN: Okay, could I ask though in that regard, what's going on in Arlington Heights Road, the old Brian Properties, the one-level office building that's been torn down? That's been vacant and I think they've done some preliminary grading out there?
MR. LYSICATOS: Where specifically on Arlington Heights Road?
CHAIRPERSON CHERWIN: Arlington Heights Road across from the fire station, easterly side of Arlington Heights Road. What is that? By Johnny's Beef down there.
MR. LYSICATOS: Oh, by Seegers Road?
CHAIRPERSON CHERWIN: Yes, Seegers, that's it.
MR. LYSICATOS: Yes, Seegers Road. So, yes, that property was demolished last year.
CHAIRPERSON CHERWIN: Right.

MR. LYSICATOS: So, we worked with the landowner on some of the restoration activities. By the time we hit the fall, it was too late for the seeding, but they had done grading, some of the topsoiling. We're continuing to coordinate with them to finish up those restoration activities, and then we'll work with them on potential concepts for that site.

CHAIRPERSON CHERWIN: Okay, so that project hasn't been, there's nothing been put in front of us for that.

MS. HITZEMANN: No.

MR. LYSICATOS: Nothing has been submitted, no.

CHAIRPERSON CHERWIN: All right, I get asked about it a lot, so that's why I asked. Okay, thank you for that.

Is there a motion to adjourn?

COMMISSIONER LORENZINI: I'll make that motion.

COMMISSIONER GREEN: I'll second it.

CHAIRPERSON CHERWIN: All in favor?

(Chorus of ayes.)

CHAIRPERSON CHERWIN: Any opposed?

(No response.)

CHAIRPERSON CHERWIN: All right, hearing none, we will close the hearing and be adjourned.

(Gavel banged.)

CHAIRPERSON CHERWIN: I should say close the meeting and be adjourned. The hearing is already closed. All right, thank you, everybody.

(Whereupon, at 7:54 p.m., the public hearing on the above-mentioned petition was adjourned.)

DRAFT

STATE OF ILLINOIS)
) SS.
COUNTY OF KANE)

I, RONALD LeGRAND, JR., depose and say that I am a digital court reporter doing business in the State of Illinois; that I reported verbatim the foregoing proceedings and that the foregoing is a true and correct transcript to the best of my knowledge and ability.

_____
RONALD LeGRAND, JR.

SUBSCRIBED AND SWORN TO
BEFORE ME THIS _____ DAY OF
_____, A.D. 2026.

_____
NOTARY PUBLIC

DRAFT

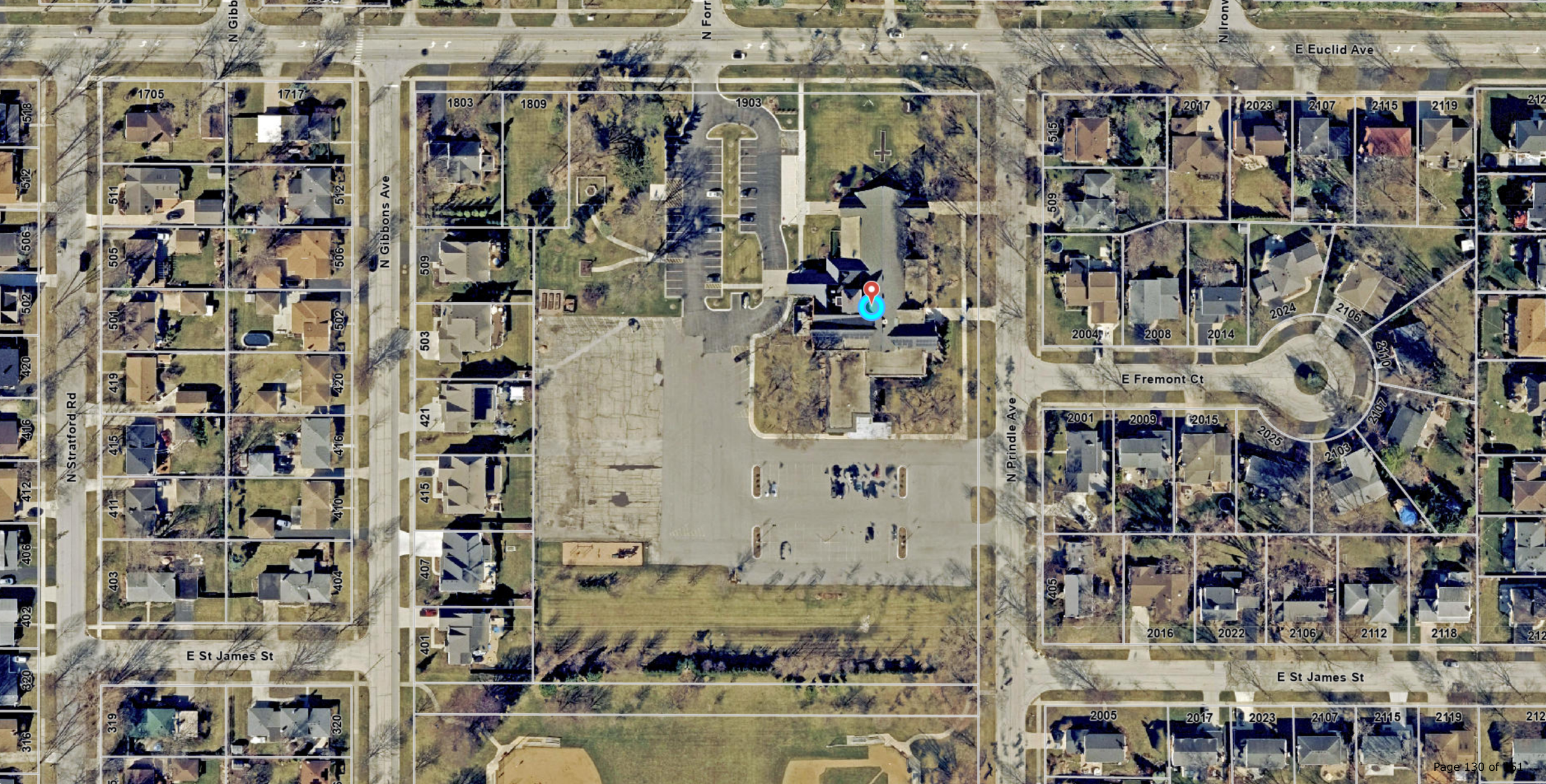
E Euclid Ave
N Gibbons Ave
N Stratford Rd
N Prindle Ave
E Fremont Ct
E St James St
1705
1717
1803
1809
1903
2017
2023
2107
2115
2119
2004
2008
2014
2024
2106
2112
2001
2009
2015
2025
2103
2107
2016
2022
2106
2112
2118
2005
2017
2023
2107
2115
2119

PLAT OF SURVEY

PARCEL 1: THE WEST 125 FEET OF THE NORTH 2 ACRES OF THE FOLLOWING DESCRIBED TRACT OF LAND: THE NORTHEAST QUARTER (EXCEPT THE EAST 30 ACRES THEREOF) OF THE SOUTHWEST 1/4 OF SECTION 28, TOWNSHIP 42 NORTH, RANGE 11, EAST OF THE THIRD PRINCIPAL MERIDIAN, EXCEPT THE WEST 33 FEET THEREOF TAKEN FOR STREET.

PARCEL 2: THE NORTH 485 FEET OF THE WEST 10 ACRES OF THE EAST 30 ACRES OF THE NORTHEAST 1/4 OF THE SOUTHWEST 1/4 OF SECTION 28, TOWNSHIP 42 NORTH, RANGE 11, EAST OF THE THIRD PRINCIPAL MERIDIAN, EXCEPT THE EAST 33 FEET THEREOF TAKEN FOR STREET.

PARCEL 3: THE NORTH 485 FEET (EXCEPT THE NORTH 2 ACRES) OF THE FOLLOWING DESCRIBED TRACT OF LAND: THE NORTHEAST 1/4 (EXCEPT THE EAST 30 ACRES THEREOF) OF THE SOUTHWEST 1/4 OF SECTION 28, TOWNSHIP 42 NORTH, RANGE 11, EAST OF THE THIRD PRINCIPAL MERIDIAN, EXCEPT THE WEST 33 FEET THEREOF TAKEN FOR STREET.

PARCEL 4: THE NORTHEAST 1/4 (EXCEPT THE EAST 20 ACRES THEREOF) OF THE SOUTHWEST 1/4 AND (EXCEPT THE NORTH 485 FEET THEREOF) OF SECTION 28, TOWNSHIP 42 NORTH, RANGE 11, EAST OF THE THIRD PRINCIPAL MERIDIAN, EXCEPT THE WEST 33 FEET, EXCEPT THE SOUTH 33 FEET AND EXCEPT THE EAST 33 FEET THEREOF TAKEN FOR STREETS. (EXCEPTING FROM SAID TRACT THE SOUTH 627 FEET THEREOF).

PARCEL 5: THE NORTH 2 ACRES EXCEPT THE WEST 125 FEET OF SAID NORTH 2 ACRES OF THE FOLLOWING DESCRIBED TRACT OF LAND: THE NORTHEAST 1/4 (EXCEPT THE EAST 30 ACRES THEREOF) OF THE SOUTHWEST 1/4 OF SECTION 28, TOWNSHIP 42 NORTH, RANGE 11, EAST OF THE THIRD PRINCIPAL MERIDIAN, EXCEPT THE WEST 33 FEET THEREOF TAKEN FOR STREET.

COMMONLY KNOWN AS: FIRST UNITED METHODIST CHURCH, 1903 EUCLID AVENUE, ARLINGTON HEIGHT, ILLINOIS.

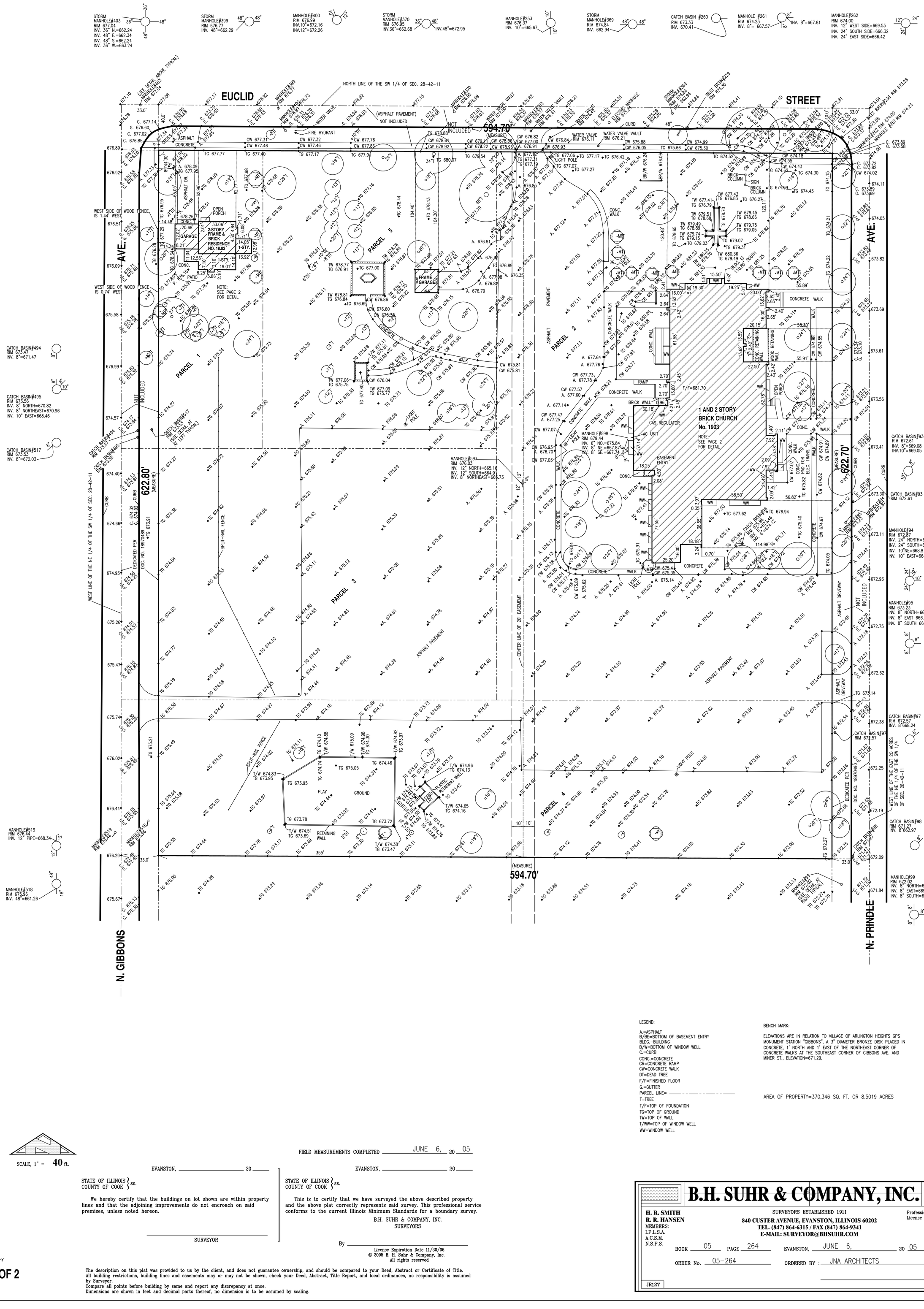
STORM MANHOLE#403 RIM 677.04 INV. 36" N.=662.24 INV. 48" E.=662.34 INV. 48" S.=662.24 INV. 36" W.=663.24
STORM MANHOLE#399 RIM 676.77 INV. 48"=662.29
MANHOLE#400 RIM 676.99 INV.10"=672.16 INV.12"=672.26
STORM MANHOLE#370 RIM 676.95 INV.36"=662.68 INV.48"=672.95
MANHOLE#253 RIM 676.37 INV. 10"=665.67
STORM MANHOLE#369 RIM 674.84 INV. 662.94
CATCH BASIN #260 RIM 673.33 INV. 670.41
MANHOLE #261 RIM 674.23 INV. 8"= 667.57 INV. 8"=667.81
MANHOLE#262 RIM 674.00 INV. 12" WEST SIDE=669.53 INV. 24" SOUTH SIDE=666.32 INV. 24" EAST SIDE=666.42
EUCLID
STREET
AVE.
N. PRINDLE
N. GIBBONS
NORTH LINE OF THE SW 1/4 OF SEC. 28-42-11
WEST LINE OF THE NE 1/4 OF THE SW 1/4 OF SEC. 28-42-11
EAST LINE OF THE EAST 20 ACRES OF THE NE 1/4 OF THE SW 1/4 OF SEC. 28-42-11
(SEE DETAIL ABOVE TYPICAL)
(ASPHALT PAVEMENT) NOT INCLUDED
NOT INCLUDED
594.70' (MEASURE)
622.80' (MEASURE)
622.70' (MEASURE)
WATER VALVE
FIRE HYDRANT
WATER VALVE VAULT
ELECTRIC MANHOLE
INLET BASIN#229 RIM 674.35
INLET BASIN#236 RIM 673.28
MANHOLE #261 RIM 674.23
CURB
CONCRETE
ASPHALT
WEST SIDE OF WOOD FENCE IS 1.44' WEST
WEST SIDE OF WOOD FENCE IS 0.74' WEST
OPEN PORCH
2-STORY FRAME & BRICK RESIDENCE NO. 18.03
GARAGE
1-STY.
PATIO
FRAME GARAGE
PARCEL 1
PARCEL 2
PARCEL 3
PARCEL 4
PARCEL 5
ASPHALT PAVEMENT
1 AND 2 STORY BRICK CHURCH No. 1903
NOTE: SEE PAGE 2 FOR DETAIL
BRICK WALL
BRICK COLUMN
SIGN
CONC. WALK
CONCRETE WALK
CONC. RETAINING WALL
WOOD RETAINING WALL
RAMP
F/F=681.70
GAS REGULATOR
AC UNIT
BASEMENT ENTRY
CONC. WALK PAD FOR ELEC. TRANS.
BLDG. S 110.80'
LIGHT POLE
SPLIT-RAIL FENCE
PLAY GROUND
RETAINING WALL
PLASTIC RETAINING WALL
SAND LOT
ASPHALT DRIVEWAY
CENTER LINE OF 20' EASEMENT
DEDICATED PER DOC. NO. 18970489
WEST LINE OF THE EAST 20 ACRES OF THE NE 1/4 OF THE SW 1/4 OF SEC. 28-42-11
CATCH BASIN#494 RIM 673.47 INV. 8"=671.47
CATCH BASIN#495 RIM 673.56 INV. 8" NORTH=670.82 INV. 8" NORTHEAST=670.96 INV. 10" EAST=668.46
CATCH BASIN#517 RIM 673.53 INV. 8"=672.03
MANHOLE#519 RIM 676.44 INV. 12" PIPE=668.34
MANHOLE#518 RIM 675.96 INV. 48"=661.26
MANHOLE#597 RIM 676.03 INV. 12" NORTH=665.16 INV. 12" SOUTH=664.91 INV. 8" NORTHEAST=665.73
MANHOLE#598 RIM 679.44 INV. 6" NO.=675.84 INV. 8" NE.=667.87 INV. 8" SE.=667.74
CATCH BASIN#93 RIM 672.61 INV. 8"=669.08 INV.10"=669.05
MANHOLE#94 RIM 672.87 INV. 24" NORTH=664.41 INV. 24" SOUTH=664.30 INV. 10"NE=668.87 INV. 10" EAST=664.83
MANHOLE#95 RIM 673.23 INV. 8" NORTH=666.39 INV. 8" EAST 666.47 INV. 8" SOUTH 666.46
CATCH BASIN#97 RIM 672.57 INV. 8"668.24
CATCH BASIN#98 RIM 671.27 INV. 8"662.97
MANHOLE#99 RIM 672.02 INV. 8" NORTH=665.16 INV. 8" EAST=665.12 INV. 8" SOUTH=665.14
MANHOLE#102 RIM 672.02 (SEE DETAIL AT RIGHT TYPICAL)
MANHOLE#103 RIM 672.27
MANHOLE#104 RIM 672.87
MANHOLE#105 RIM 673.15
MANHOLE#106 RIM 673.06
MANHOLE#107 RIM 673.03
MANHOLE#108 RIM 673.06
MANHOLE#109 RIM 673.13
MANHOLE#110 RIM 673.13
MANHOLE#111 RIM 673.11
MANHOLE#112 RIM 673.11
MANHOLE#113 RIM 673.11
MANHOLE#114 RIM 673.11
MANHOLE#115 RIM 673.11
MANHOLE#116 RIM 673.11
MANHOLE#117 RIM 673.11
MANHOLE#118 RIM 673.11
MANHOLE#119 RIM 673.11
MANHOLE#120 RIM 673.11
MANHOLE#121 RIM 673.11
MANHOLE#122 RIM 673.11
MANHOLE#123 RIM 673.11

First United Methodist Church of Arlington Heights (FUMCAH) Project Narrative

Project Narrative: The First United Methodist Church of Arlington Heights' (FUMCAH) current western-most parking lot needs replacing, and in alignment with the Village of Arlington Heights' and FUMCAH's sustainability goals, we are taking the opportunity to turn a small portion of this impervious asphalt into a green space. This green space will contain sustainable prairie grass, shrubs, and trees which will absorb rainwater, thus reducing the amount of rainwater run-off into the Village's sewer system. This will also increase the aesthetics and a nice visual barrier between the adjacent neighbors and the FUMCAH parking lot. 100% of the adjacent neighbors have signed a petition in support of this project. The Metropolitan Water Reclamation District determined No WMO permit is required for this project since there are no changes to the existing water/sewer system nor grade of the impacted area. We are looking forward to completing this project.

Thank you,

Dan Buntley

FUMCAH Trustee

West Setback Variance Request

1. Requirement: Chapter 28, Section 5.1-3.3(b) West Setback.
   - Variance requested: Provide 30.5’ setback where 43.2’ setback is required.
     - Today’s setback along the West edge of the property is 0.5’. With the addition of the 30’ green space, we are increasing the set back to 30.5’. This improvement does not alter the essential character of the locality and will be compatible with the existing uses and zoning of nearby properties
     - FUMCAH’s unique circumstance is their need to balance providing the needed total number of parking spaces required by our operation while trying to increase the amount of green space to save the environment all while meeting the Village requirements.
     - Increasing the set back to 30.5’ is in harmony with the spirit and intent of providing a space buffer between FUMCAH’s parking lot and the adjacent neighbor’s back yards. All adjacent neighbors have signed an affidavit in support of this 30.5’ setback.
     - The set back of 30.5’ is the minimum variance necessary while allowing reasonable use of the property.

Curb Variance Request

1. Requirement: Chapter 28, Section 10.2-12.4 Perimeter Curbing.
   - Variance requested: Use parking blocks which are widely used throughout the village (see next slide) and will reduce the total cost of the project while maintaining a safe design.
     - Using parking blocks does not alter the essential character of the locality and will be compatible with the existing uses and zoning of nearby properties
     - FUMCAH's unique circumstance is their non-profit status and finding a cost-conscious design while meeting all Village requirements.
     - Using parking blocks is in harmony with the spirit and intent of providing a barrier between parking and adjacent areas.
     - Using parking blocks is the minimum variance necessary while allowing reasonable use of the property

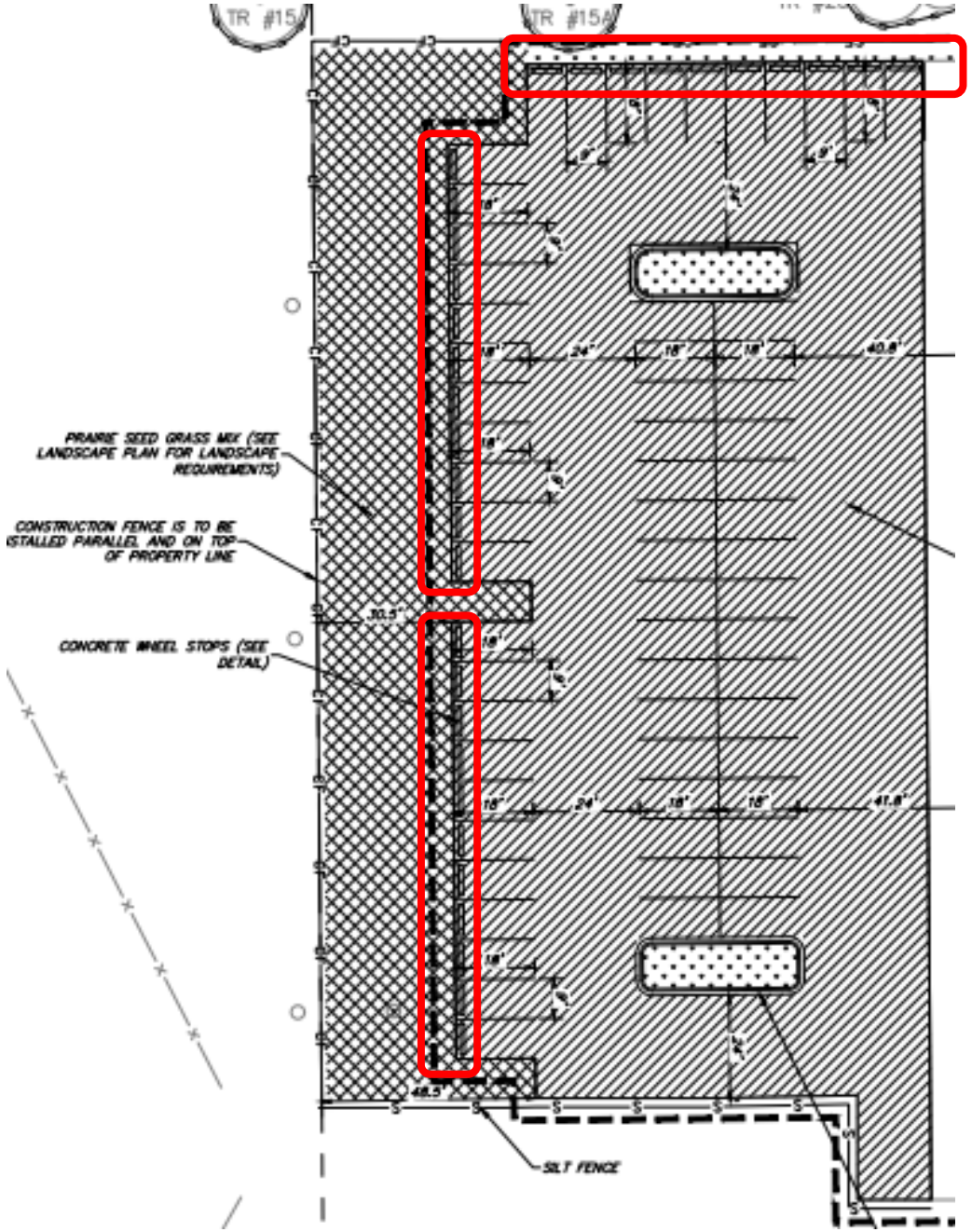

Use of Parking Blocks throughout Arlington Heights

GI Alliance of IL, 1415 S. A.H. Road



A-Z Medical Supply, 1141 S. A.H. Road



Rand Medical Center, 1925 E Rand Rd



Village Bank & Trust, 234 W Northwest Hwy

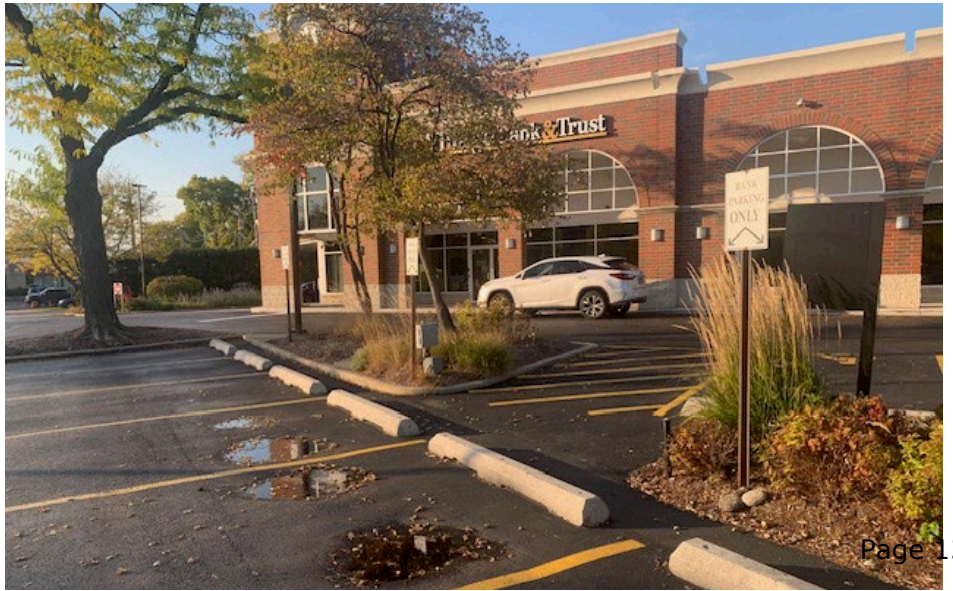

Parking Spaces Variance Request

1. Requirement: Chapter 28, Section 10.4.4 Parking Spaces.
   - Variance requested: Provide 235 parking spaces where 320 parking spaces are required.
     - Providing 235 parking spaces does not alter the essential character of the locality and will be compatible with the existing uses and zoning of nearby properties
     - FUMCAH's unique circumstance, as showing the parking study, is at no time does the actual use of the parking lot exceed the proposed 235 parking spaces.
     - Providing 235 parking spaces is in harmony with the spirit and intent of this chapter.
     - 235 parking spaces meets the needs of the church while minimizing the impervious surfaces on the property thereby improving the church's overall impact to the environment. This is the minimum variance necessary while allowing reasonable use of the property.

ENGINEERING PLANS FOR

PARKING LOT RENOVATIONS
FIRST UNITED METHODIST CHURCH OF ARLINGTON HEIGHTS

1903 E EUCLID AVENUE
ARLINGTON HEIGHTS, ILLINOIS 60004

STANDARD SYMBOLS

FEATURE	EXISTING	PROPOSED
BUFFALO BOX		
BUSH/SHRUB		
CATCH BASIN		C.O.
CLEANOUT	CO	
COMBINE SEWER LINE		
CONTOUR	708	708
CULVERT		
DITCH/SWALE		
ELECTRIC LINE	E	E
ELECTRIC MANHOLE	E	E
FENCE	X X X X	X X X X
FIRE HYDRANT		
FLARED END SECTION		
GAS LINE	G	G
GAS MANHOLE	G	G
GAS VALVE		
INLET		
LIGHT POLE		
OVERHEAD WIRES	A	A
POWER POLE		
R.O.W LINE		
R.O.W MARKER		
SANITARY FORCEMAIN LINE	C C C	C C C
SANITARY SEWER LINE	C	C
SANITARY SEWER MANHOLE		
SIGN		
SPOT ELEVATION	×850.00	×850.0
STORM SEWER LINE		
STORM SEWER MANHOLE		
TELEPHONE LINE	T	T
TELEPHONE MANHOLE	T	T
TELEPHONE BOX/PEDESTAL	T	T
TREE-CONIFEROUS (SIZE/TAG#)	345	345
TREE-DECIDUOUS (SIZE/TAG#)	12"	12"
VALVE BOX		
VALVE VAULT		
WATER VALVE		
WATERMAIN LINE	W	W

EXISTING UTILITIES: WHEN THE PLANS OR SPECIAL PROVISIONS INCLUDE INFORMATION PERTAINING TO THE LOCATION OF UNDERGROUND UTILITY FACILITIES, SUCH INFORMATION REPRESENTS ONLY THE OPINION OF THE ENGINEER AS TO THE LOCATION OF SUCH UTILITIES AND IS ONLY INCLUDED FOR THE CONVENIENCE OF THE BIDDER. THE ENGINEER AND OWNER ASSUME NO RESPONSIBILITY WHATEVER IN RESPECT TO THE SUFFICIENCY OR ACCURACY OF THE INFORMATION SHOWN ON THE PLANS RELATIVE TO THE LOCATION OF UNDERGROUND UTILITY FACILITIES OR THE MANNER IN WHICH THEY ARE TO BE REMOVED OR ADJUSTED. IT SHALL BE THE CONTRACTOR'S RESPONSIBILITY TO DETERMINE THE ACTUAL LOCATION OF ALL SUCH FACILITIES. HE SHALL ALSO OBTAIN FROM THE RESPECTIVE UTILITY COMPANIES, DETAILED INFORMATION RELATIVE TO THE LOCATION OF THEIR FACILITIES AND THE WORKING SCHEDULES OF THE UTILITY COMPANIES FOR REMOVING OR ADJUSTING THEM.

CONTRACTOR IS RESPONSIBLE FOR CONTACTING J.U.L.I.E. AT 1-800-892-0123 AND MUST ACQUIRE A DIG NUMBER A MINIMUM OF 72 HOURS PRIOR TO ANY WORK BEING DONE.

NOTE: CONSTRUCTION MEANS, METHODS AND JOB SITE SAFETY IS THE SOLE AND EXCLUSIVE RESPONSIBILITY OF THE CONTRACTOR

J.U.L.I.E

JOINT UTILITY LOCATION INFORMATION FOR EXCAVATION CALL 811

811 Know what's **below.** **Call** before you dig.

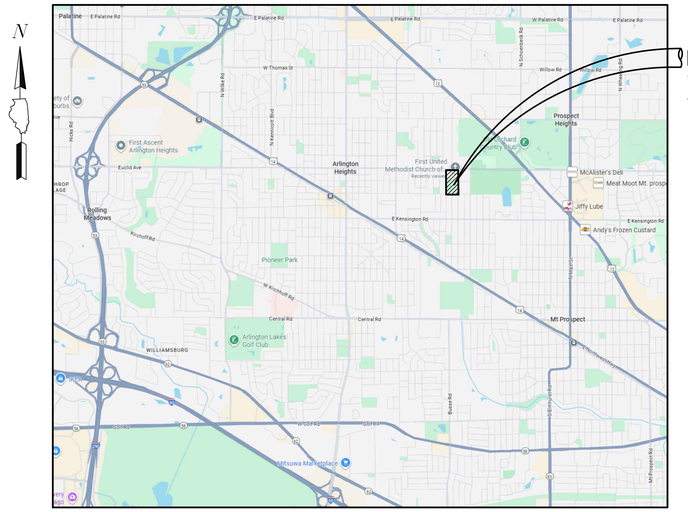

LOCATION MAP
(Not to Scale)

COORDINATES SHOWN HEREON REFERENCE THE ILLINOIS STATE PLANE COORDINATION SYSTEM, EAST ZONE, NORTH AMERICAN DATUM OF 1983.

DRAINAGE STATEMENT

TO THE BEST OF OUR KNOWLEDGE AND BELIEF THE DRAINAGE OF THE SURFACE WATERS WILL NOT BE CHANGED BY CONSTRUCTION OF THIS SUBDIVISION (DEVELOPMENT), OR ON THIS SITE, OR ANY PART THEREOF, OR THAT IF SUCH SURFACE WATER DRAINAGE WILL BE CHANGED, REASONABLE PROVISIONS HAVE BEEN MADE FOR THE COLLECTION AND DIVERSION OF SUCH SURFACE WATERS INTO PUBLIC AREAS, OR DRAINS WHICH THE PROPERTY OWNER HAS A RIGHT TO USE, AND THAT SUCH SURFACE WATERS WILL BE PLANNED FOR IN ACCORDANCE WITH GENERALLY ACCEPTED ENGINEERING PRACTICES SO AS TO REDUCE THE LIKELIHOOD OF DAMAGE TO THE ADJOINING PROPERTY BECAUSE OF CONSTRUCTION OF THE SUBDIVISION (DEVELOPMENT), OR THIS SITE.

SHEET INDEX

1. TITLE SHEET
2. EXISTING CONDITIONS/DEMOLITION PLAN
3. GEOMETRIC PLAN
4. GRADING & UTILITY PLAN
5. LANDSCAPE PLAN
6. SOIL EROSION & SEDIMENT CONTROL PLAN
7. GENERAL NOTES
8. DETAILS

TOPOGRAPHIC SURVEY BY:

GEWALT HAMILTON ASSOCIATES, INC.
625 FOREST EDGE DRIVE
VERNON HILLS, ILLINOIS 60061
TELEPHONE: 847-478-9700

PLANS PREPARED FOR:

FIRST UNITED METHODIST CHURCH OF ARLINGTON HEIGHTS
1903 E EUCLID AVENUE
ARLINGTON HEIGHTS, ILLINOIS 60004
TELEPHONE: 847-255-5112

PROFESSIONAL DESIGN FIRM LICENSE:

GEWALT HAMILTON ASSOCIATES, INC.
DESIGN FIRM - LAND SURVEYOR/PROF ENG
LICENSE NUMBER: 184.000922-0010
EXPIRES: 4/30/2027

COORDINATING/PERMITTING AGENCIES:

VILLAGE OF ARLINGTON HEIGHTS 847-368-5250

MARK G.F. COBB 062-067573 LICENSED PROFESSIONAL ENGINEER STATE OF ILLINOIS

SIGNED: P.E.
MARK G.F. COBB

DATE: MARCH 9, 2026

ILLINOIS LICENSE NO.: 062-067573

EXPIRATION DATE: NOVEMBER 30, 2027

ISSUE FOR PERMIT

GEWALT HAMILTON ASSOCIATES, INC.
625 Forest Edge Drive ■ Vernon Hills, IL. 60061
TEL 847.478.9700 ■ FAX 847.478.9701

COPYRIGHT NOTICE
This drawing is the property of Gewalt-Hamilton Assoc., Inc. and is not to be used for any purpose other than the specific project and site named herein, and cannot be reproduced in any manner without the express written permission from Gewalt-Hamilton Associates, Inc.

TITLE SHEET

PARKING LOT RENOVATIONS
FIRST UNITED METHODIST CHURCH OF ARLINGTON HEIGHTS
1903 E EUCLID AVENUE, ARLINGTON HEIGHTS, IL 60004

NO.	BY	DATE	REVISION

NO.	BY	DATE	REVISION

FILE: 6195.000-DT.dwg
DRAWN BY: JMB
DATE: 03.09.2026
GHA PROJECT # 6195.000
CHECKED BY: MGFC
DATE: 03.09.2026
SCALE: N.A.
SHEET NUMBER: 1 OF 8 SHEETS

J:\6195\6195.000 FINISH PARKING LOT\6195.000-DT.DWG 3/9/2026 3:22 PM

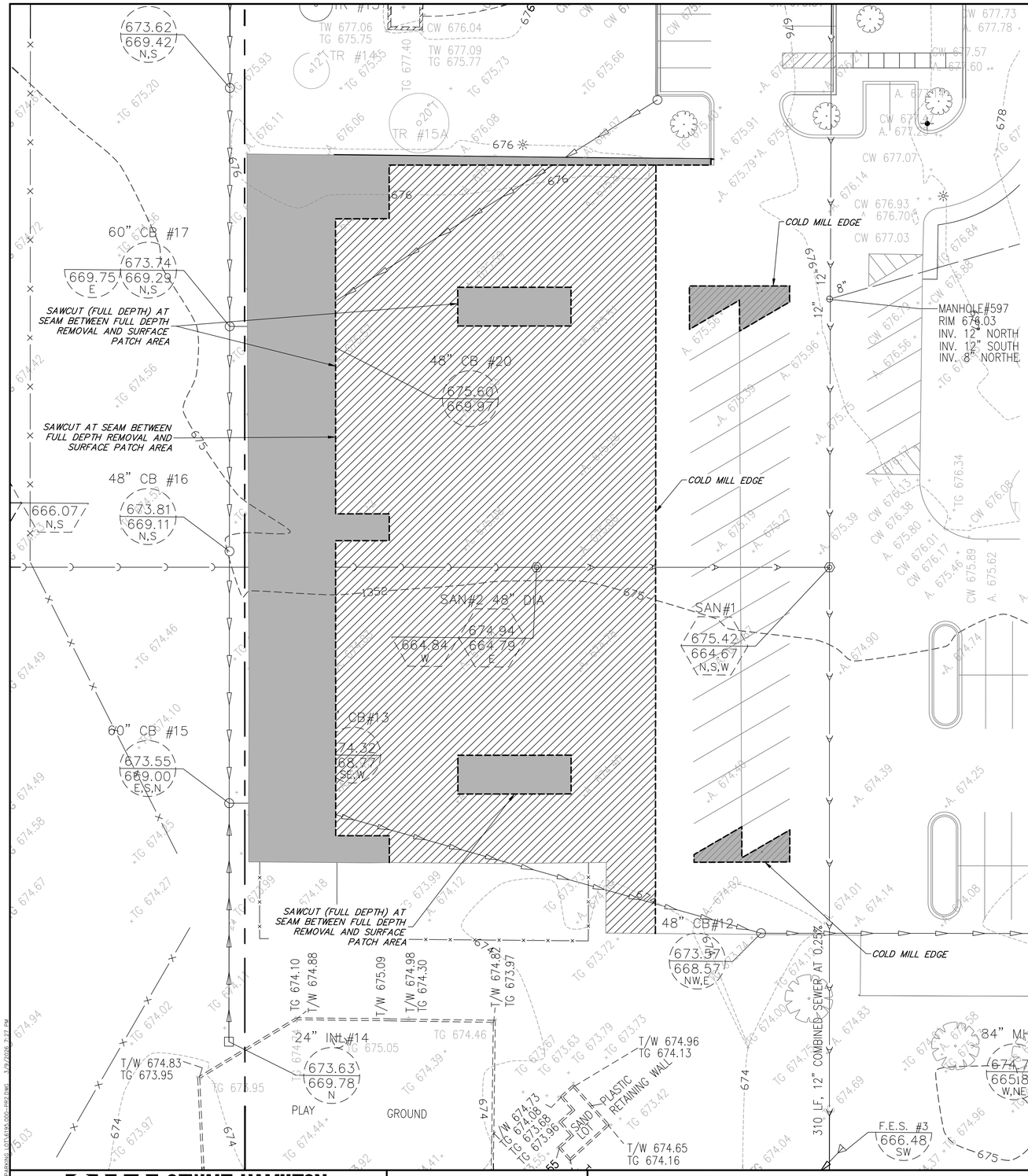

REMOVAL LEGEND

- PAVEMENT REMOVAL FULL DEPTH
- 4" MILL
- COLD MILL EDGE/SAWCUT (FULL DEPTH)

N

GRAPHIC SCALE

20 0 10 20

(IN FEET)
1 inch = 20 ft.

EXISTING CONDITION AND DEMOLITION NOTES

1. PRIOR TO STARTING ANY CONSTRUCTION, PROVIDE SOIL EROSION AND SEDIMENT CONTROL DEVICES AS SHOWN ON THE PLANS AND AS REQUIRED PER IEPA NPDES GUIDELINES. REFER TO NOTES AND DETAILS THROUGHOUT THE ENTIRE PLAN SET.
2. PRIOR TO STARTING ANY EXCAVATION WORK, PROVIDE TREE PROTECTION, PRESERVATION AND ROOT PRUNING AS SHOWN ON THE PLANS AND NOTES THROUGHOUT THE ENTIRE PLAN SET.
3. THE CONTRACTOR SHALL BE RESPONSIBLE FOR FENCING THE ACTIVE WORK ZONE FROM THE PUBLIC AND PROTECTING THE PUBLIC FROM ANY CONSTRUCTION RELATED HAZARDS. AT A MINIMUM, ALL EXCAVATION, DEMOLITION AREAS AND OTHER AREAS POTENTIALLY HAZARDOUS TO PEDESTRIANS AND VEHICLES MUST BE PROTECTED.
4. AT ALL TIMES, MAIN DRIVE SHALL REMAIN OPEN AND UNOBSTRUCTED. TEMPORARY SHUT DOWN OF ONE TRAFFIC LANE AT A TIME WILL BE PERMITTED FOR SHORT TERM PERIODS AND SHALL BE COORDINATED WITH APPOINTED PROPERTY OWNER CONSTRUCTION STAFF. SHORT TERM CLOSINGS SHALL BE COMPLETED WITHIN THE WORK DAY AND RESTORED TO UNOBSTRUCTED ACCESS BY THE CLOSE OF THE WORK DAY.
5. THE EXISTING FACILITIES WILL REMAIN OPEN AND ACTIVELY USED.
6. THE CONTRACTOR IS RESPONSIBLE FOR THE DEMOLITION AND DISPOSAL OF ALL EXISTING IMPROVEMENTS ONSITE NECESSARY TO COMPLETE THE JOB. THESE IMPROVEMENTS INCLUDE, BUT ARE NOT LIMITED TO, EXISTING PAVEMENTS, CURBS, SIDEWALKS, MANHOLES, AND OTHER STRUCTURES WITHIN THE WORK AREA. EXCAVATE AND GRADE TO PROPOSED PAVEMENT SUBBASE GRADES. THESE ITEMS SHALL BE COMPLETELY REMOVED AND LEGALLY DISPOSED OF OFFSITE.
7. THE CONTRACTOR SHALL INCLUDE ALL ASSOCIATED COSTS WITH THE REMOVAL, TRANSPORT, DISPOSAL, TESTING AND CERTIFICATION OF "UNCONTAMINATED SOIL" AS DEFINED UNDER 415 ILCS 5/3.160 INCLUDING ANY FEES, TAXES, OR SURCHARGES CHARGED BY OR THROUGH THE OPERATOR(S) OF CLEAN CONSTRUCTION OR DEMOLITION DEBRIS FILL OPERATIONS OR UNCONTAMINATED SOIL FILL OPERATIONS FOR THE ACCEPTANCE OF UNCONTAMINATED SOIL.
8. THE CONTRACTOR SHALL SUBMIT TO THE OWNER AND / OR CITY A CONSTRUCTION STAGING AND FENCING PLAN. PEDESTRIAN ACCESS CONFORMING TO ADA STANDARDS SHALL BE MAINTAINED ON ALL ADA ROUTES IMPACTED BY CONSTRUCTION AT ALL TIMES.
9. CONTRACTOR TO STRIP EXISTING TOPSOIL AND STOCKPILE IN THE LOCATION SHOWN ON THE PLANS. PRIOR TO FINAL PLACEMENT OF TOPSOIL THE TOPSOIL SHALL BE PULVERIZED ON-SITE.
10. EXISTING CONDITION SURVEY PROVIDED BY B.H. SUHR & CO DATED JUNE 6, 2005.

GHA GEWALT HAMILTON ASSOCIATES, INC.
625 Forest Edge Drive ■ Vernon Hills, IL. 60061
TEL 847.478.9700 ■ FAX 847.478.9701

COPYRIGHT NOTICE
This drawing is the property of Gewalt-Hamilton Assoc., Inc. and is not to be used for any purpose other than the specific project and site named herein, and cannot be reproduced in any manner without the express written permission from Gewalt-Hamilton Associates, Inc.

EXISTING CONDITIONS/DEMOLITION PLAN

PARKING LOT RENOVATIONS
FIRST UNITED METHODIST CHURCH OF ARLINGTON HEIGHTS
1903 E EUCLID AVENUE, ARLINGTON HEIGHTS, IL 60004

NO.	BY	DATE	REVISION

NO.	BY	DATE	REVISION

FILE: 6195.000-PR2.dwg
DRAWN BY: JMB
DATE: 03.09.2026
GHA PROJECT # 6195.000
CHECKED BY: MGFC
DATE: 03.09.2026
SCALE: 1"=20'
SHEET NUMBER: 2 OF 8 SHEETS

IMPROVEMENT AREA PARKING SPACE DATA

EXISTING SPACES		PROPOSED SPACES	
STANDARD	ADA	STANDARD	ADA
115	0	180	0

ENTIRE LOT PARKING SPACE DATA

EXISTING SPACES		PROPOSED SPACES	
STANDARD	ADA (VAN ACCESSIBLE)	STANDARD	ADA (VAN ACCESSIBLE)
161	8	226	8

PROPOSED LEGEND

- HMA RESURFACING
- SEED RESTORATION
- PRAIRIE GRASS SEED RESTORATION
- B6.12 CURB & GUTTER (REGULAR)
- TREE TRUNK PROTECTION FENCE
- —S— PERIMETER EROSION BARRIER
- —CF— CONSTRUCTION FENCE
- WHEEL STOP
- LIMITS OF SITE IMPROVEMENT AREA

N

GRAPHIC SCALE

20 0 10 20

(IN FEET)

1 inch = 20 ft.

GEOMETRIC AND PAVING PLAN

1. ALL PAVEMENT DIMENSIONS ARE TO EDGE OF PAVEMENT, UNLESS OTHERWISE NOTED. E=EDGE OF PAVEMENT, B=BACK OF CURB, F=FACE OF CURB. RADII DIMENSIONS ARE TO BACK OF CURB.
2. INSTALL ALL CURB AND SIDEWALK AS SHOWN. NOTE SOME CURBS REQUIRE REVERSE PITCH GUTTER. DOWEL NEW SIDEWALK AND CURB TO EXISTING AND PROPOSED CURBS PER GENERAL NOTES. WHEN CONSTRUCTING A CARRIAGE WALK, THE PROPOSED SIDEWALK CONTRACTION AND EXPANSION JOINTS SHALL ALIGN WITH EXISTING CURB JOINTS.
3. PROVIDE 1.90% CROSS SLOPE AND 4.5% MAXIMUM LONGITUDINAL SLOPE ON ALL SIDEWALKS AND PEDESTRIAN PATH WAYS UNLESS OTHERWISE INDICATED. ILLINOIS ACCESSIBILITY CODE REQUIRES A MAXIMUM CONSTRUCTED CROSS SLOPE OF 2.00% AND LONGITUDINAL SLOPE OF 5.00%.
4. INSTALL BITUMINOUS PAVEMENT AS SHOWN. REFER TO DETAIL SHEET FOR SPECIFIC PAVEMENT SECTIONS AND GENERAL NOTE SHEET FOR CONSTRUCTION, TESTING AND COMPACTION REQUIREMENTS.
5. ALL PARKING LOT STALL MARKINGS SHALL BE 4" YELLOW PAINT AND ALL OTHER PARKING LOT PAVEMENT MARKINGS SHALL BE PAINT, COLOR AS NOTED, IN ACCORDANCE WITH SECTION 780 OF THE IDOT STANDARD SPECIFICATIONS. (TWO SINGLE APPLICATIONS, 16 MILS EACH REQUIRED). SITE PAVEMENT MARKING SHALL BE COORDINATED WITH SITE ENGINEER. CONTRACTOR SHALL NOTIFY SITE ENGINEER 48 HRS PRIOR TO INSTALLING PAVEMENT MARKING.
6. FOR FINAL RESTORATION, THE CONTRACTOR SHALL BE RESPONSIBLE FOR RESTORING ALL DISTURBED TURF AREAS AND PROPOSED TURF AREAS AS FOLLOWS:
   a. PRIOR TO PLACEMENT OF TOPSOIL RESTORATION AREA SUBGRADE MATERIAL SHALL BE ROTOTILLED AND RE-COMPACTED TO A MAXIMUM OF 80% STANDARD PROCTOR TO A DEPTH OF 6".
   b. SPREAD A MINIMUM OF 6" OF EXISTING SITE SALVAGED SCREENED TOPSOIL OR NEW PULVERIZED TOPSOIL ON ALL DISTURBED AREAS. COMPACT TO 80% STANDARD PROCTOR.
   c. TOPSOIL MUST BE FREE OF LITTER, BRUSH, ROCKS AND EARTH CLODS OF GREATER THAN 1 INCH IN ANY DIMENSION. CONTAIN BETWEEN 1%-10% ORGANIC MATTER, 12%-50% CLAY, AND LESS THAN 55% SAND CONTENT. PH SHALL BE BETWEEN 6.0 AND 8.0.
   d. SEED RESTORATION AREAS AS FOLLOWS:
      - IDOT CLASS 1 SEED. (LAWN MIXTURE)
      - FERTILIZER SHALL BE APPLIED FOLLOWING IDOT REQUIREMENTS.
      - EROSION CONTROL BLANKET SHALL BE NORTH AMERICAN GREEN S75 OR APPROVED EQUAL INSTALLED FOLLOWING MANUFACTURER GUIDELINES.
   e. CONTRACTOR SHALL BE RESPONSIBLE FOR WATERING THE RESTORED AREA PER IDOT SPECIFICATIONS FOR A DURATION OF 30 DAYS PRIOR TO THE OWNER'S FINAL REVIEW AND ACCEPTANCE. IF RESTORATION HAS NOT SHOWN A "CATCH" OR UNIFORM STAND, THE CONTRACTOR SHALL REPEAT RESEEDING OR RESODDING UNTIL A UNIFORM STAND IS ACHIEVED.
13. ONCE RESTORATION HAS BEEN COMPLETED, THE CONTRACTOR SHALL REMOVE EROSION CONTROL DEVICES. SILT FENCE TRENCHES SHALL BE BACKFILLED AND RESTORED IN KIND. STORM STRUCTURES SHALL BE CLEANED OF DEBRIS.
14. ALL B6.12 CURB AND GUTTER CONTRACTION JOINTS SHALL BE SAWCUT A MINIMUM OF 2" DEEP WITHIN 12 HOURS OF POUR.

TR #13

TR #14

TR #15A

B6.12 CURB AND GUTTER TO HAVCE IDENTICAL GEOMETRY TO PAVEMENT MARKING ISLAND PREVIOUSLY EXISTING

IDOT TYPE 1 LAWN MIXTURE SEED MIX

PRAIRIE SEED GRASS MIX (SEE LANDSCAPE PLAN FOR LANDSCAPE REQUIREMENTS)

CONCRETE WHEEL STOPS (SEE DETAIL)

EDGE OF CONCRETE CURB TO BE FLUSH AND ADJACENT TO SAWCUT EDGE OF PAVEMENT

EXISTING ANGLED PAVEMENT MARKINGS TO REMAIN

1.75" HMA SURFACE
2.25" HMA BINDER

EDGE OF CONCRETE CURB TO BE FLUSH AND ADJACENT TO SAWCUT EDGE OF PAVEMENT

B6.12 CURB AND GUTTER TO HAVE IDENTICAL GEOMETRY TO PAVEMENT MARKING ISLAND PREVIOUSLY EXISTING

ONE WAY SIGN

DO NOT ENTER SIGN

B6.12 COMBINATION CURB AND GUTTER

310 LF, 12" COMBINED SEWER AT 0.25%

9' LONG 4.0" WIDE YELLOW PAINT LINES SPACED 22.0' O.C.

TR #40

TR #38

GHA GEWALT HAMILTON ASSOCIATES, INC.
625 Forest Edge Drive ■ Vernon Hills, IL. 60061
TEL 847.478.9700 ■ FAX 847.478.9701

COPYRIGHT NOTICE
This drawing is the property of Gewalt-Hamilton Assoc., Inc. and is not to be used for any purpose other than the specific project and site named herein, and cannot be reproduced in any manner without the express written permission from Gewalt-Hamilton Associates, Inc.

GEOMETRIC PLAN

PARKING LOT RENOVATIONS
FIRST UNITED METHODIST CHURCH OF ARLINGTON HEIGHTS
1903 E EUCLID AVENUE, ARLINGTON HEIGHTS, IL 60004

NO.	BY	DATE	REVISION
1	MGFC	10.09.2025	PER VILLAGE COMMENTS

FILE: 6195.000-PR2.dwg
DRAWN BY: JMB
DATE: 03.09.2026
GHA PROJECT # 6195.000
CHECKED BY: MGFC
DATE: 03.09.2026
SCALE: 1"=20'
SHEET NUMBER: 3
OF 8 SHEETS

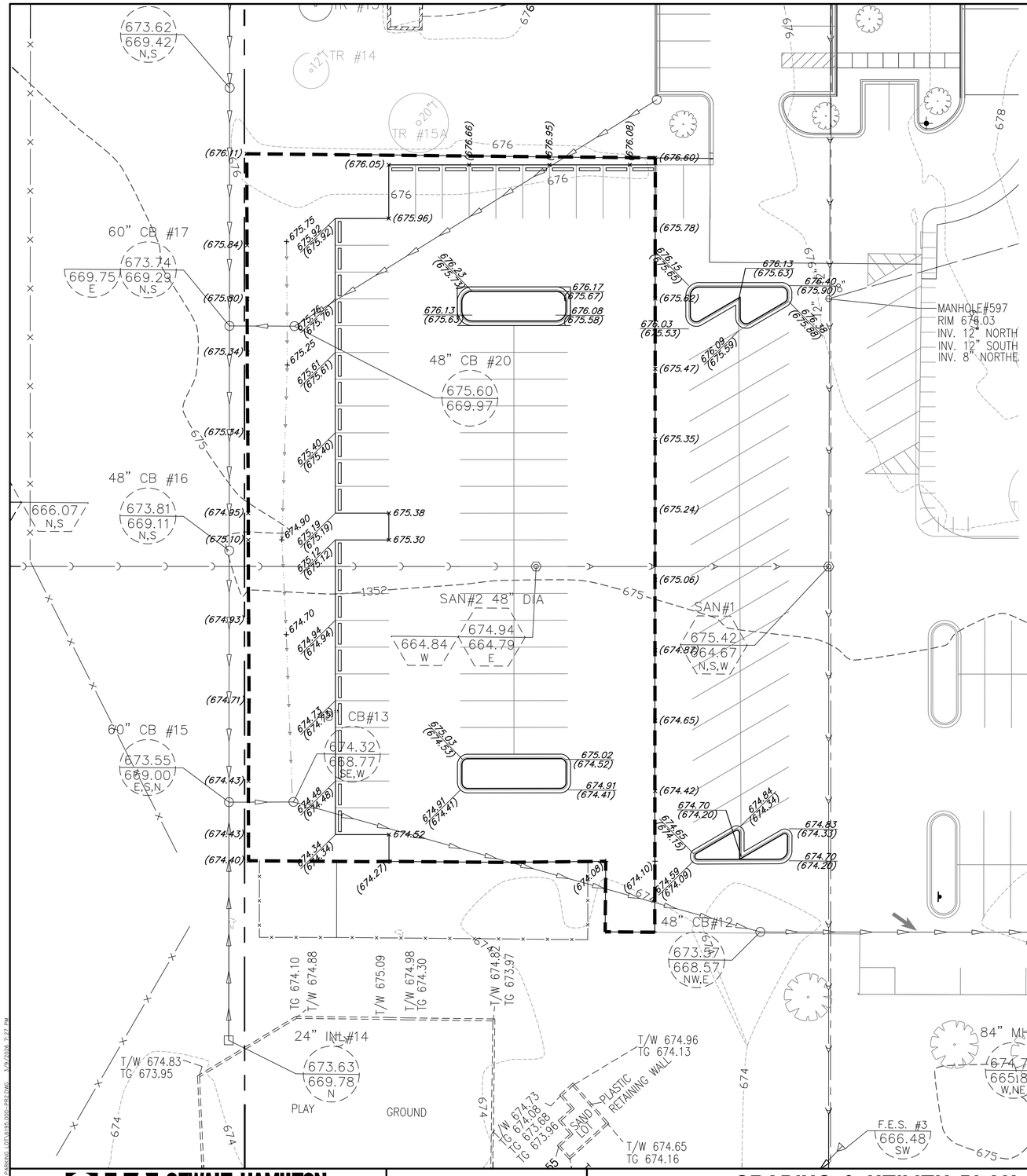

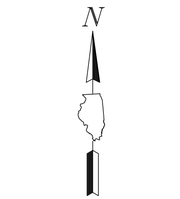

GRADING LEGEND

- EDGE OF PAVEMENT / EXISTING SPOT ELEVATION
- TOP OF CURB / FLOW LINE
- PROPOSED SPOT ELEVATION
- MATCH EXISTING SPOT ELEVATION
- B6.12 CURB & GUTTER (REGULAR)
- LIMITS OF GRADING

GRADING PLAN NOTES

1. PRIOR TO STARTING ANY CONSTRUCTION, PROVIDE SOIL EROSION AND SEDIMENT CONTROL DEVICES AS SHOWN ON THE PLANS AND AS REQUIRED PER IEPA NPDES GUIDELINES. REFER TO NOTES AND DETAILS THROUGHOUT THE ENTIRE PLAN SET.
2. PRIOR TO STARTING ANY EXCAVATION WORK, PROVIDE TREE PROTECTION, PRESERVATION AND ROOT PRUNING AS SHOWN ON THE PLANS AND NOTES THROUGHOUT THE ENTIRE PLAN SET.
3. REFER TO GENERAL NOTES FOR GRADING, COMPACTION AND PROOF ROLL REQUIREMENTS.
4. THE CONTRACTOR SHALL IMPORT OR EXPORT SOIL AS NECESSARY TO CONSTRUCT THE SITE TO SPECIFIED PLAN GRADES. SUCH WORK IS CONSIDERED INCIDENTAL TO THE CONTRACT AND NO ADDITIONAL COMPENSATION SHALL BE ALLOWED FOR SUCH WORK. MINOR ADJUSTMENTS TO GRADES CAN BE ACCOMMODATED WITH PROJECT ENGINEER APPROVAL.
5. THE CONTRACTOR SHALL INCLUDE ALL ASSOCIATED COSTS WITH THE REMOVAL, TRANSPORT, DISPOSAL, TESTING AND CERTIFICATION OF "UNCONTAMINATED SOIL" AS DEFINED UNDER 415 ILCS 5/3.160 INCLUDING ANY FEES, TAXES, OR SURCHARGES CHARGED BY OR THROUGH THE OPERATOR(S) OF CLEAN CONSTRUCTION OR DEMOLITION DEBRIS FILL OPERATIONS OR UNCONTAMINATED SOIL FILL OPERATIONS FOR THE ACCEPTANCE OF UNCONTAMINATED SOIL.
6. ALL STRUCTURES SHALL BE ADJUSTED TO MEET FINISHED TURF AND PAVEMENT GRADES.
7. REFER TO GEOMETRIC PLAN FOR FINAL RESTORATION REQUIREMENTS.
8. CONTRACTOR SHALL PROVIDE THE FOLLOWING AS-CONSTRUCTED DOCUMENTS AT THE CONCLUSION OF THE PROJECT:
   a. PARKING LOT AND HARD SURFACES
      - TOP OF CURB AND FLOWLINE ELEVATIONS AT SIMILAR LOCATIONS TO PROPOSED GRADING.
      - SPOT ELEVATIONS AT SUMMIT / HIGH AND LOW POINTS.
12. CONTRACTOR SHALL ENSURE POSITIVE DRAINAGE TO ALL INLETS AND CATCHBASINS. AREAS OF SURFACE PONDING SHALL BE CORRECTED BY THE CONTRACTOR AT NO ADDITIONAL EXPENSE TO THE OWNER.
13. ALL LAWN AREAS DISTURBED AS A RESULT OF CONSTRUCTION SHALL BE RESTORED TO PRECONSTRUCTION LAWN CONDITION FOLLOWING RESTORATION REQUIREMENTS.

GHA GEWALT HAMILTON ASSOCIATES, INC.
625 Forest Edge Drive ■ Vernon Hills, IL. 60061
TEL 847.478.9700 ■ FAX 847.478.9701

COPYRIGHT NOTICE
This drawing is the property of Gewalt-Hamilton Assoc., Inc. and is not to be used for any purpose other than the specific project and site named herein, and cannot be reproduced in any manner without the express written permission from Gewalt-Hamilton Associates, Inc.

GRADING & UTILITY PLAN

PARKING LOT RENOVATIONS
FIRST UNITED METHODIST CHURCH OF ARLINGTON HEIGHTS
1903 E EUCLID AVENUE, ARLINGTON HEIGHTS, IL 60004

NO.	BY	DATE	REVISION

NO.	BY	DATE	REVISION

FILE: 6195.000-PR2.dwg
DRAWN BY: JMB
DATE: 03.09.2026
GHA PROJECT #: 6195.000
CHECKED BY: MGFC
DATE: 03.09.2026
SCALE: 1"=20'
SHEET NUMBER: 4
OF 8 SHEETS

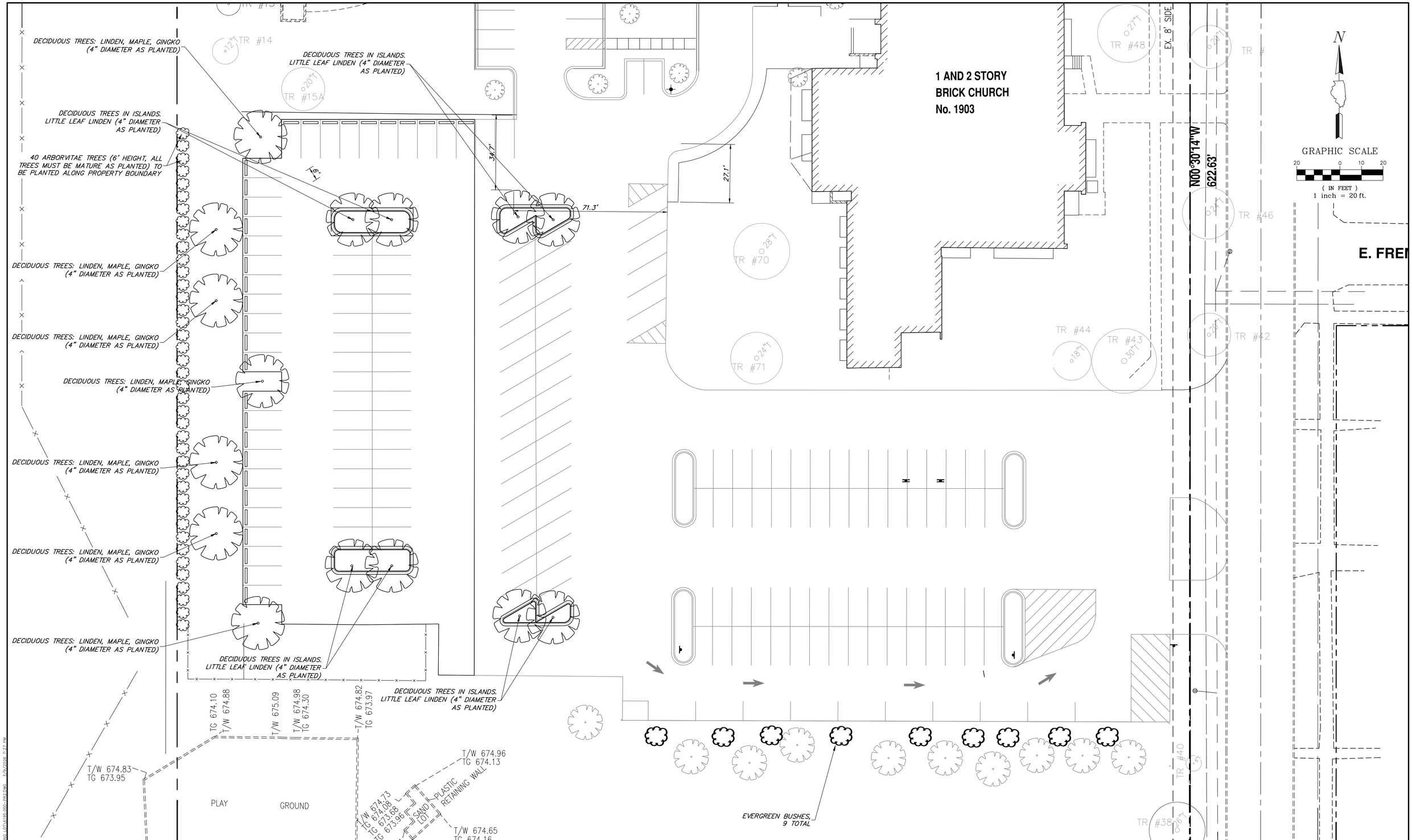

GHA GEWALT HAMILTON ASSOCIATES, INC.
625 Forest Edge Drive ▪ Vernon Hills, IL. 60061
TEL 847.478.9700 ▪ FAX 847.478.9701

COPYRIGHT NOTICE
This drawing is the property of Gewalt-Hamilton Assoc., Inc. and is not to be used for any purpose other than the specific project and site named herein, and cannot be reproduced in any manner without the express written permission from Gewalt-Hamilton Associates, Inc.

LANDSCAPE PLAN

PARKING LOT RENOVATIONS
FIRST UNITED METHODIST CHURCH OF ARLINGTON HEIGHTS
1903 E EUCLID AVENUE, ARLINGTON HEIGHTS, IL 60004

NO.	BY	DATE	REVISION	NO.	BY	DATE	REVISION

FILE: 6195.000-PR2.dwg
DRAWN BY: JMB
DATE: 03.09.2026
GHA PROJECT # 6195.000
CHECKED BY: MGFC
DATE: 03.09.2026
SCALE: 1"=20'
SHEET NUMBER: 5 OF 8 SHEETS

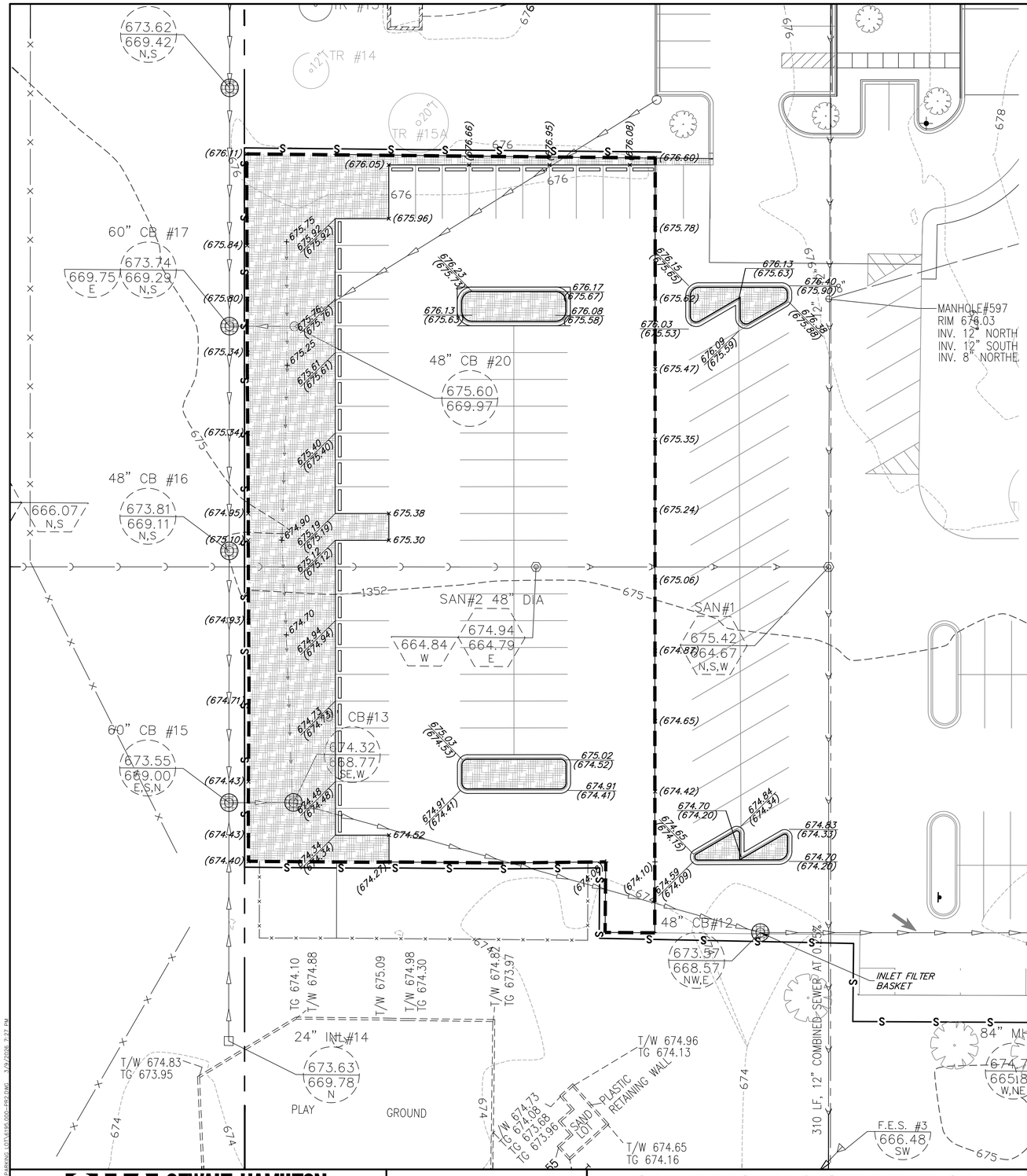

N

GRAPHIC SCALE

20 0 10 20

(IN FEET)
1 inch = 20 ft.

SESC LEGEND

TOPSOIL FURNISH AND PLACE, VARIABLE DEPTH, 6" MIN. SEEDING, CLASS 1
– EROSION CONTROL BLANKET NAG S75 (4:1 SLOPES)

—S— SILT FENCE INSTALLATION

STORM SEWER INLET PROTECTION:
– INLET FILTER BASKET

SEDIMENTATION AND EROSION CONTROL NOTES

A. THE STORM WATER POLLUTION PREVENTION PLAN (SWPPP) IS COMPRISED OF THE SOIL REOSION AND SEDIMENT CONTROL PLANS, THE STANDARD DETAILS, THE PLAN NARRATIVE, PLUS THE PERMIT AND ALL SUBSEQUENT REPORTS AND RELATED DOCUMENTS.

B. ALL CONTRACTORS AND SUBCONTRACTORS INVOLVED WITH STORM WATER POLLUTION PREVENTION SHALL OBTAIN A COPY OF THE (SWPPP) AND THE ILLINOIS GENERAL CONSTRUCTION PERMIT (ILR10) AND BECOME FAMILIAR WITH THEIR CONTENTS AND SIGN THE CERTIFICATION FORMS.

C. BEST MANAGEMENT PRACTICES (BMP'S) AND CONTROLS SHALL CONFORM TO FEDERAL, STATE, OR LOCAL REQUIREMENTS OR MANUAL OF PRACTICE, AS APPLICABLE. CONTRACTOR SHALL IMPLEMENT ADDITIONAL CONTROLS AS DIRECTED BY PERMITTING AGENCY, PROJECT ENGINEER OR OWNER.

D. PERMITS FOR ANY CONSTRUCTION ACTIVITY IMPACTING STATE WATERS OR REGULATED WETLANDS MUST BE MAINTAINED ON SITE AT ALL TIMES.

E. GENERAL CONTRACTOR SHALL DENOTE ON PLAN THE TEMPORARY PARKING AND STORAGE AREA WHICH SHALL ALSO BE USED AS THE EQUIPMENT MAINTENANCE AND CLEANING AREA, EMPLOYEE PARKING AREA, AND AREA FOR LOCATING PORTABLE FACILITIES, OFFICE TRAILERS, AND TOILET FACILITIES.

F.

G. ALL WASH WATER (CONCRETE TRUCKS, VEHICLE CLEANING, EQUIPMENT CLEANING, ETC.) SHALL BE DETAINED AND PROPERLY TREATED OR DISPOSED.

H. SUFFICIENT OIL AND GREASE ABSORBING MATERIALS AND FLOTATION BOOMS SHALL BE MAINTAINED ON SITE OR READILY AVAILABLE TO CONTAIN AND CLEAN–UP FUEL OR CHEMICAL SPILLS AND LEAKS.

I. DUST ON THE SITE SHALL BE CONTROLLED. THE USE OF MOTOR OILS AND OTHER PETROLEUM BASED OR TOXIC LIQUIDS FOR DUST SUPPRESSION OPERATIONS IS PROHIBITED. WATER USE MUST NOT CAUSE ADDITIONAL EROSION.

J. RUBBISH, TRASH, GARBAGE, LITTER, OR OTHER SUCH MATERIALS SHALL BE DEPOSITED INTO SEALED CONTAINERS. MATERIALS SHALL BE PREVENTED FROM LEAVING THE PREMISES THROUGH THE ACTION OF WIND OR STORM WATER DISCHARGE INTO DRAINAGE DITCHES OR WATERS OF THE STATE.

K. ALL STORM WATER POLLUTION PREVENTION MEASURES PRESENTED ON THIS PLAN, AND IN THE (SWPPP), SHALL BE INITIATED AS SOON AS PRACTICABLE.

L. IF THE ACTION OF VEHICLES TRAVELING OVER THE GRAVEL CONSTRUCTION ENTRANCES IS NOT SUFFICIENT TO REMOVE THE MAJORITY OF DIRT, WASHING SHALL BE IMPLEMENTED AND PROVISIONS MUST BE MADE TO INTERCEPT THE WASH WATER AND TRAP THE SEDIMENT BEFORE IT IS CARRIED OFF THE SITE.

M. ALL MATERIALS SPILLED, DROPPED, WASHED, OR TRACKED FROM VEHICLES ONTO ROADWAYS OR INTO STORM DRAINS MUST BE REMOVED BY THE END OF THE DAY.

N. ON–SITE SOIL STOCKPILE AND BORROW AREAS SHALL BE PROTECTED FROM EROSION AND SEDIMENTATION THROUGH IMPLEMENTATION OF BEST MANAGEMENT PRACTICES. STOCKPILE AND BORROW AREA LOCATIONS SHALL BE NOTED ON THE PLAN AND PERMITTED IN ACCORDANCE WITH GENERAL PERMIT REQUIREMENTS.

O. ERODIBLE STOCKPILES MUST BE ENCLOSED WITH SILT FENCE BY THE END OF THE WORK DAY.

P. SLOPES SHALL BE LEFT IN A ROUGHENED CONDITION DURING THE GRADING PHASE TO REDUCE RUNOFF VELOCITIES AND EROSION.

Q. ALL CONSTRUCTION SHALL BE STABILIZED AT THE END OF EACH WORKING DAY, THIS INCLUDES BACKFILLING OF TRENCHES FOR UTILITY CONSTRUCTION AND PLACEMENT OF GRAVEL OR BITUMINOUS PAVING FOR ROAD CONSTRUCTION.

R. SOIL DISTURBANCE SHALL BE CONDUCTED IN SUCH A MANNER AS TO MINIMIZE EROSION. SOIL STABILIZATION MEASURES SHALL CONSIDER THE TIME OF YEAR, SITE CONDITIONS AND THE USE OF TEMPORARY OR PERMANENT MEASURES

S. SOIL EROSION AND SEDIMENT CONTROL FEATURES SHALL BE CONSTRUCTED PRIOR TO THE COMMENCEMENT OF HYDROLOGIC DISTURBANCE OF UPLAND AREAS.

T. DISTURBED AREAS SHALL BE STABILIZED WITH TEMPORARY OR PERMANENT MEASURES WITHIN 7 CALENDAR DAYS OF THE END OF ACTIVE HYDROLOGIC DISTURBANCE OR REDISTURBANCE.

U. ALL TEMPORARY AND PERMANENT EROSION CONTROL MEASURES MUST BE MAINTAINED AND REPAIRED AS NEEDED. THE PROPERTY OWNER SHALL ULTIMATELY BE RESPONSIBLE FOR MAINTAINENCE AND REPAIR.

V. IF DEWATERING SERVICES ARE USED, ADJOINING PROPERTIES AND DISCHARGE LOCATIONS SHALL BE PROTECTED FROM EROSION. DISCHARGES SHALL BE ROUTED THROUGH AN EFFECTIVE SEDIMENT CONTROL MEASURE (i.e. SEDIMENT TRAP, SEDIMENT BASIN, OR OTHER APPROPRIATE MEASURE).

W. THE EROSION CONTROL MEASURES INDICATED ON THE PLANS ARE THE MINIMUM REQUIREMENTS. ADDITIONAL MEASURES MAY BE REQUIRED, AS DIRECTED BY THE ENGINEER OR GOVERNING AGENCY.

GHA GEWALT HAMILTON ASSOCIATES, INC.
625 Forest Edge Drive ■ Vernon Hills, IL. 60061
TEL 847.478.9700 ■ FAX 847.478.9701

COPYRIGHT NOTICE
This drawing is the property of Gewalt–Hamilton Assoc., Inc. and is not to be used for any purpose other than the specific project and site named herein, and cannot be reproduced in any manner without the express written permission from Gewalt–Hamilton Associates, Inc.

SOIL EROSION & SEDIMENT CONTROL PLAN

PARKING LOT RENOVATIONS
FIRST UNITED METHODIST CHURCH OF ARLINGTON HEIGHTS
1903 E EUCLID AVENUE, ARLINGTON HEIGHTS, IL 60004

NO.	BY	DATE	REVISION
1	MGFC	01.30.2026	PER VILLAGE COMMENTS

NO.	BY	DATE	REVISION

FILE: 6195.000–PR2.dwg
DRAWN BY: JMB
DATE: 03.09.2026
GHA PROJECT # 6195.000
CHECKED BY: MGFC
DATE: 03.09.2026
SCALE: 1"=20'
SHEET NUMBER: 6
OF 8 SHEETS

GENERAL NOTES

1. ALL CONSTRUCTION SHALL BE PERFORMED ACCORDING TO THE ILLINOIS DEPARTMENT OF TRANSPORTATION "STANDARD SPECIFICATIONS FOR ROAD AND BRIDGE CONSTRUCTION" LATEST EDITION, THE "SUPPLEMENTAL SPECIFICATIONS AND RECURRING SPECIAL PROVISIONS" LATEST EDITION, THE "STANDARD SPECIFICATIONS FOR WATER AND SEWER MAIN CONSTRUCTION IN ILLINOIS" LATEST EDITION, THE ILLINOIS PLUMBING CODE, THE DETAILS IN THESE PLANS, THE CONTRACT DOCUMENTS, ALL APPLICABLE REQUIREMENTS OF THE ILLINOIS DEPARTMENT OF TRANSPORTATION, THE IEPA AND ORDINANCES OF AUTHORITIES HAVING JURISDICTION AND ALL ADDENDA THERETO.

2. EASEMENTS FOR THE EXISTING UTILITIES, BOTH PUBLIC AND PRIVATE AND UTILITIES WITHIN PUBLIC RIGHTS-OF-WAY ARE SHOWN ON THE PLANS ACCORDING TO AVAILABLE RECORDS. THE CONTRACTOR SHALL BE RESPONSIBLE FOR DETERMINING THE EXACT LOCATION IN THE FIELD OF THESE UTILITY LINES AND THEIR PROTECTION FROM DAMAGE DUE TO CONSTRUCTION OPERATIONS. IF EXISTING UTILITY LINES OF ANY NATURE ARE ENCOUNTERED WHICH CONFLICT WITH NEW CONSTRUCTION, THE CONTRACTOR SHALL NOTIFY THE ENGINEER IMMEDIATELY SO THAT THE CONFLICT MAY BE RESOLVED.

3. WHENEVER, DURING CONSTRUCTION OPERATIONS, ANY LOOSE MATERIAL IS DEPOSITED IN THE FLOW LINE OF GUTTERS, DRAINAGE STRUCTURES, DITCHES, ETC. SUCH THAT THE NATURAL FLOW LINE OF WATER IS OBSTRUCTED, THE LOOSE MATERIAL WILL BE REMOVED AT THE CLOSE OF EACH WORKING DAY. AT THE CONCLUSION OF CONSTRUCTION OPERATIONS, ALL DRAINAGE STRUCTURES AND FLOW LINES SHALL BE FREE FROM DIRT AND DEBRIS. THIS WORK SHALL BE CONSIDERED INCLUDED IN THE CONTRACT. THE CONTRACTOR'S FAILURE TO PROVIDE THE ABOVE WILL PRECLUDE ANY POSSIBLE ADDED COMPENSATION REQUESTED DUE TO DELAYS OR UNSUITABLE MATERIALS CREATED AS A RESULT THEREOF.

4. THE CONTRACTOR SHALL VERIFY ALL DIMENSIONS AND EXISTING CONDITIONS AFFECTING THEIR WORK WITH THE ACTUAL CONDITIONS AT THE JOB SITE PRIOR TO ORDERING MATERIALS. IN ADDITION, THE CONTRACTOR MUST VERIFY THE LINE AND GRADES. IF THERE ARE ANY DISCREPANCIES FROM WHAT IS SHOWN ON THE CONSTRUCTION PLANS, STANDARD SPECIFICATIONS AND/OR SPECIAL DETAILS, THE CONTRACTOR SHALL SECURE WRITTEN INSTRUCTION FROM THE ENGINEER PRIOR TO PROCEEDING WITH ANY PART OF THE WORK AFFECTED BY OMISSION OR DISCREPANCIES. FAILING TO SECURE SUCH INSTRUCTION, THE CONTRACTOR WILL BE CONSIDERED TO HAVE PROCEEDED AT HIS/HER OWN RISK AND EXPENSE AND NO ADDITIONAL COMPENSATION WILL BE PROVIDED FOR ANY COSTS INCURRED..

5. ALL PAVEMENT DIMENSIONS ARE SHOWN TO EDGE OF PAVEMENT UNLESS OTHERWISE NOTED.

6. WHERE SECTION OR SUBSECTION MONUMENTS ARE ENCOUNTERED, THE ENGINEER SHALL BE NOTIFIED BEFORE THE MONUMENTS ARE REMOVED. THE CONTRACTOR SHALL CAREFULLY PRESERVE ALL PROPERTY MARKS AND MONUMENTS UNTIL THE OWNER, AUTHORIZED SURVEYOR OR AGENT HAS WITNESSED OR OTHERWISE REFERENCED THEIR LOCATION.

7. THE CONTRACTOR SHALL NOTIFY THE ENGINEER AT LEAST 72 HOURS PRIOR TO BEGINNING WORK.

8. IF DURING CONSTRUCTION THE CONTRACTOR ENCOUNTERS OR OTHERWISE BECOMES AWARE OF ANY SEWERS OR UNDERDRAINS OTHER THAN THOSE SHOWN ON THE PLANS, HE/SHE SHALL INFORM THE ENGINEER, WHO SHALL DIRECT THE WORK NECESSARY TO MAINTAIN OR REPLACE THE FACILITIES IN SERVICE AND TO PROTECT THEM FROM DAMAGE DURING CONSTRUCTION IF MAINTAINED. EXISTING FACILITIES TO BE MAINTAINED THAT ARE DAMAGED BECAUSE OF NON-COMPLIANCE WITH THIS PROVISION SHALL BE REPLACED AT THE CONTRACTOR'S OWN EXPENSE.

9. THE CONTRACTOR SHALL PROVIDE TEMPORARY TOILET FACILITIES AND HAND SANITIZING STATIONS FOR THE USE OF ALL THE CONTRACTORS PERSONNEL EMPLOYED ON THE WORK SITE. THE FACILITIES SHALL BE MAINTAINED IN PROPER SANITARY CONDITION THROUGHOUT THE PROJECT. THE LOCATION OF THE TEMPORARY FACILITIES SHALL BE APPROVED BY THE ENGINEER.

10. THE CONTRACTOR IS RESPONSIBLE FOR COMPLYING WITH THE NPDES PERMIT AND SWPPP MANUAL. IF NO NPDES PERMIT OR SWPPP MANUAL IS NEEDED FOR THE PROJECT THE CONTRACTOR SHALL PERFORM SOIL EROSION SEDIMENT CONTROL BEST PRACTICES OR AS DIRECTED BY THE OWNER TO PREVENT ILLICIT DISCHARGES FROM THE SITE.

PROJECT SPECIFIC NOTES

1. THE CONTRACTOR SHALL PROVIDE AS-BUILT DRAWINGS THAT INCLUDE; CRITICAL SPOT GRADES SUCH AS OVERFLOW ELEVATIONS, SPOT ELEVATIONS NEAR ENTRANCES, SPOT ELEVATIONS ALONG THE DESIGNATED ADA ROUTE, RIM AND INVERT ELEVATIONS OF ALL SEWERS, AND ALL FIELD CHANGES FROM THE APPROVED DRAWINGS.

2. ALL WORK PERFORMED UNDER THIS CONTRACT SHALL BE GUARANTEED BY THE CONTRACTOR AND HIS SURETY FOR A PERIOD OF 12 MONTHS FROM THE DATE OF INITIAL ACCEPTANCE OF THE WORK BY THE OWNER AGAINST ALL DEFECTS IN MATERIALS AND WORKMANSHIP OF WHATEVER NATURE.

3. ALL CONSTRUCTION WILL BE INSPECTED BY THE OWNER'S REPRESENTATIVE. ALL WORK SHALL CONFORM TO THE REQUIREMENTS OF THE MUNICIPALITY AS WELL AS THE STANDARD SPECIFICATIONS.

4. ALL PUBLIC WATER MAINS AND SANITARY SEWER MAINS MUST BE ACCEPTED BY THE VILLAGE OF ARLINGTON HEIGHTS.

5. THE SEWER AND WATER CONTRACTOR SHALL BE REQUIRED TO BE LICENSED AND BONDED WITH THE VILLAGE OF ARLINGTON HEIGHTS BEFORE WORK IS STARTED.

6. CONTRACTOR SHALL NOTIFY THE VILLAGE OF ARLINGTON HEIGHTS (847-368-5000) AND THE PROJECT ENGINEER (847-478-9700) AT LEAST 72 HOURS PRIOR TO BEGINNING ANY WORK ON THIS PROJECT.

7. THE CONTRACTOR SHALL INDEMNIFY THE OWNER, ENGINEER, THE MUNICIPALITY AND THEIR AGENTS, FROM ALL LIABILITY INVOLVED IN CONSTRUCTION, INSTALLATION AND TESTING OF THE WORK ON THIS PROJECT.

8. THE CONTRACTOR MUST CARRY INSURANCE IN ACCORDANCE WITH THE STANDARD SPECIFICATIONS. ALL OFFICIALS, EMPLOYEES AND AGENTS OF GEWALT HAMILTON ASSOCIATES MUST BE LISTED AS ADDITIONAL INSURED.

9. ALL ELEVATIONS ARE ON NAVD 88 VERTICAL DATUM.

10. THE CONTRACTOR SHALL BE RESPONSIBLE FOR THE INSTALLATION AND MAINTENANCE OF ALL TRAFFIC CONTROL TO ADEQUATELY INFORM AND PROTECT THE PUBLIC OF ALL CONSTRUCTION OPERATIONS.

11. PRIOR TO PLACEMENT OF FABRIC AND STONE, THE SUBGRADE SHALL BE PROOF-ROLLED IN THE PRESENCE OF THE ENGINEER. PROOF-ROLLING SHALL BE DONE USING A THREE AXLE DUMP TRUCK TOGETHER WITH LOAD WEIGHING AT LEAST TWENTY-FIVE (25) TONS. THE LOAD SHALL BE UNIFORMLY PLACED IN THE DUMP BODY. ALL DEFICIENCIES SHALL BE REPAIRED AND RE-PROOF-ROLLED UNTIL FOUND ACCEPTABLE TO THE ENGINEER.

12. ALL STONE USED ON THE PROJECT SHALL BE CRUSHED UNLESS SPECIFICALLY NOTED OTHERWISE.

13. ALL CONNECTIONS TO EXISTING STORM MANHOLES SHALL BE INSTALLED WITH A NEOPRENE BOOT SECURED WITH DOUBLE STAINLESS STEEL STRAPS MEETING THE REQUIREMENTS OF ASTM C-923.

14. ALL CONCRETE SHALL HAVE A LIGHT BROOM FINISH APPLIED WITHIN 1 HOUR OF FINAL STRIKING.

15. ALL CONCRETE SHALL CONSIST OF PORTLAND CEMENT CONCRETE MEETING REQUIREMENTS OF SECTION 1020. ALL SIDEWALKS, CURBS AND POST FOUNDATIONS SHALL BE CLASS SI 3,500 PSI @ 14 DAYS. ALL PAVEMENT SHALL BE CLASS PV 3,500 PSI @ 14 DAYS. WHERE NOTED ON THE PLANS HIGH EARLY CONCRETE SHALL BE CLASS PV TYPE III 3,500 PSI CONCRETE @ 3 DAYS. ALL CONCRETE REQUIRING A CURE TIME FASTER THAN 3 DAYS SHALL HAVE A MIX DESIGN SUBMITTED TO THE ENGINEER FOR APPROVAL. WHEN REQUIRED BY THE MUNICIPALITY, FLY ASH SHALL NOT BE USED IN THE MIX DESIGN. SLUMP SHALL BE 2-4" AND AIR CONTENT SHALL BE BETWEEN 5-8% UNLESS MODIFIED BY ARTICLE 1020.04.

16. ALL CONCRETE SHALL HAVE A WHITE, IDOT TYPE 3 CURING COMPOUND APPLIED TO THE SURFACE WITHIN 1 HOUR OF FINAL STRIKING AT THE MANUFACTURER RECOMMENDED APPLICATION RATE.

17. 3/4" THICK PRE-MOLDED FIBER EXPANSION JOINTS WITH 2 , 3/4" x 18" PLAIN ROUND, STEEL DOWEL BARS SHALL BE INSTALLED IN ALL CURBS AT (45') FORTY-FIVE FOOT INTERVALS AND AT ALL P.C.'S, P.T.'S AND CURB RETURNS. ALTERNATE ENDS OF THE DOWEL BARS SHALL BE GREASED AND FITTED WITH METAL EXPANSION TUBES. ALL EXPANSION JOINTS MUST BE FREE OF CONCRETE FOR FULL DEPTH. CONTRACTION JOINTS SHALL BE TOOLED AT 15' INTERVALS.

18. ALL DOWEL BARS AND TIE BARS SHALL BE EPOXY COATED UNLESS NOTED OTHERWISE.

19. ALL PAVEMENT SUBGRADE SHALL BE COMPACTED TO 95% MODIFIED PROCTOR DENSITY (ASTM D-1557). ALL SUBGRADE IN LAWN AREAS SHALL BE COMPACTED TO 90% MODIFIED PROCTOR DENSITY (ASTM D-1557). ALL TOPSOIL AND SUBGRADE 6" BELOW TOPSOIL SHALL BE COMPACTED TO 80% STANDARD PROCTOR DENSITY (ASTM D-698)

20. SPREAD SCREENED TOPSOIL ON ALL DISTURBED AREAS AND PROPOSED GREEN AREAS. TOPSOIL SHALL COMPLY WITH REQUIREMENTS OF ARTICLE 1081.05.

HOT-MIX ASPHALT MIXTURE REQUIREMENTS	
MIXTURE TYPE	AIR VOIDS @ Ndes
RECONSTRUCTION	
HOT-MIX ASPHALT SURFACE COURSE, MIX "D", IL-9.5, N50, 2.0"	3.5% @ 50 GYR

THE UNIT WEIGHT USED TO CALCULATE ALL HMA SURFACE MIXTURE QUANTITIES IS 112 LBS/SQ.YD./IN.

THE "AC TYPE" SHALL BE "PG 64-22" UNLESS MODIFIED BY DISTRICT ONE SPECIAL PROVISIONS.

FOR USE OF RECYCLED MATERIALS SEE SPECIAL PROVISIONS.

GHA GEWALT HAMILTON ASSOCIATES, INC.
625 Forest Edge Drive ■ Vernon Hills, IL. 60061
TEL 847.478.9700 ■ FAX 847.478.9701

COPYRIGHT NOTICE
This drawing is the property of Gewalt-Hamilton Assoc., Inc. and is not to be used for any purpose other than the specific project and site named herein, and cannot be reproduced in any manner without the express written permission from Gewalt-Hamilton Associates, Inc.

GENERAL NOTES

PARKING LOT RENOVATIONS
FIRST UNITED METHODIST CHURCH OF ARLINGTON HEIGHTS
1903 E EUCLID AVENUE, ARLINGTON HEIGHTS, IL 60004

NO.	BY	DATE	REVISION

NO.	BY	DATE	REVISION

FILE: 6195.000-DT.dwg
DRAWN BY: JMB
DATE: 03.09.2026
GHA PROJECT # 6195.000
CHECKED BY: MGFC
DATE: 03.09.2026
SCALE: N.A.
SHEET NUMBER: 7
OF 8 SHEETS

G:\6195\6195.000 PARKING RENOVS - ARLINGTON\6195.000-DT.DWG 3/9/2026 3:27 PM

B6.12 CURB & GUTTER

NOTES:

1. SET EXPANSION JOINTS AT ALL PC'S, PT'S, FIVE FEET ON EITHER SIDE OF ANY FRAMES, AND AT 45' MAX. INTERVALS.
2. SAW CUT CONTRACTION JOINTS FULL FACE AND TOP, AT LEAST 2 INCHES IN DEPTH AND AT 15' MAXIMUM INTERVALS WITHIN 24 HOURS OF POURING.
3. SEE "EXPANSION JOINT DETAIL" FOR EXPANSION JOINT REQUIREMENTS.
4. CURING COMPOUND REQUIRED.

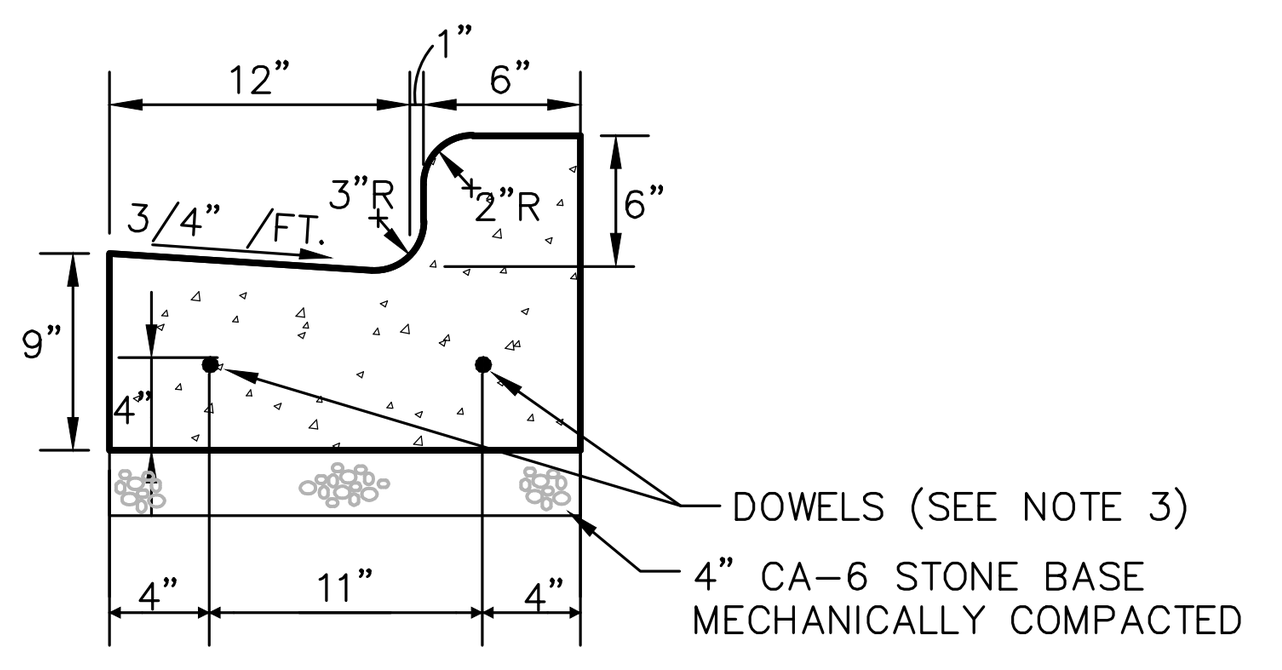

REGULAR SECTION

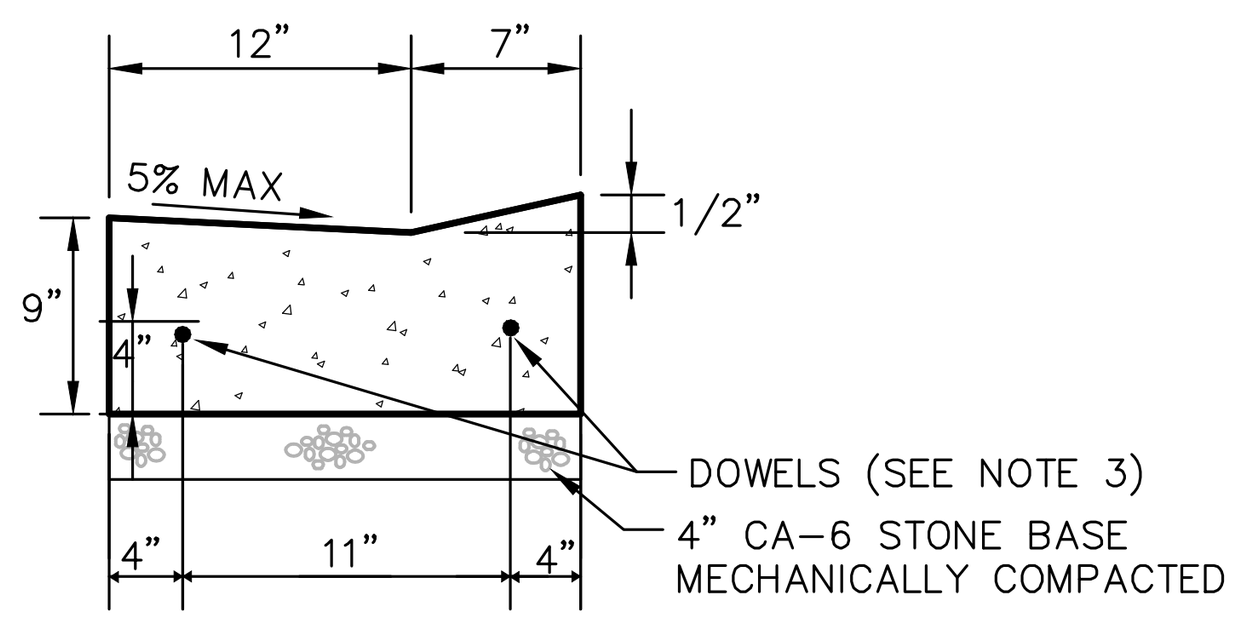

ADA DEPRESSED SECTION

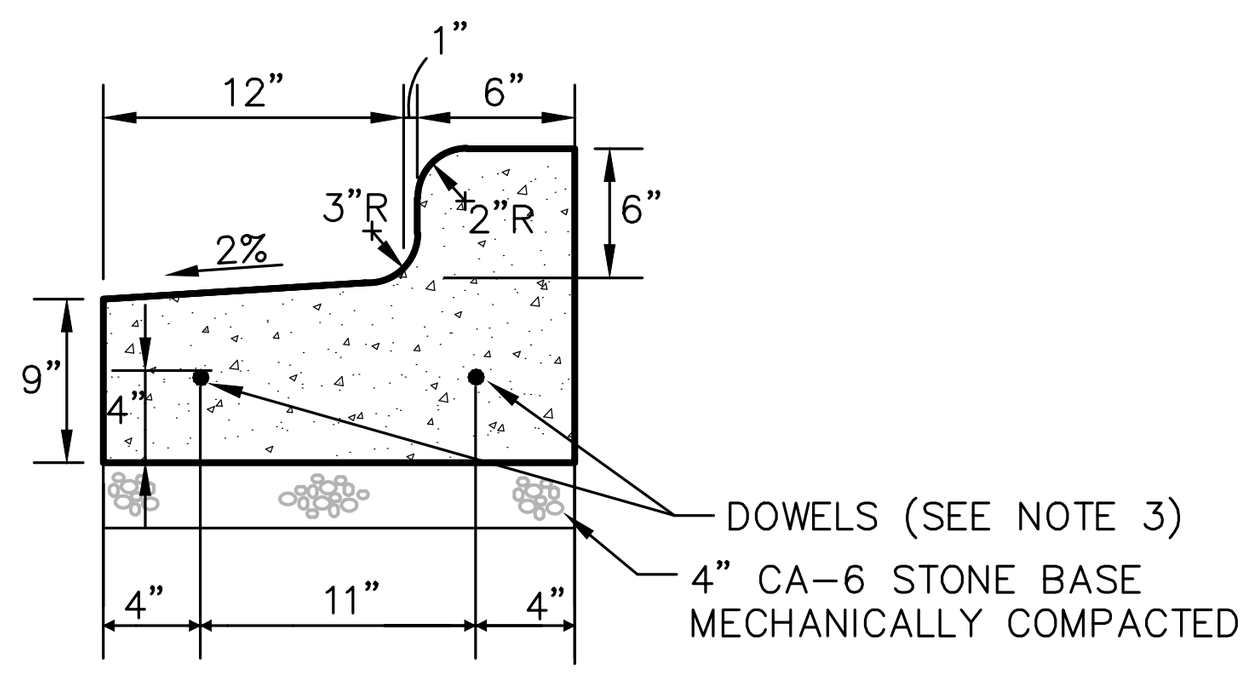

REVERSE PITCH SECTION

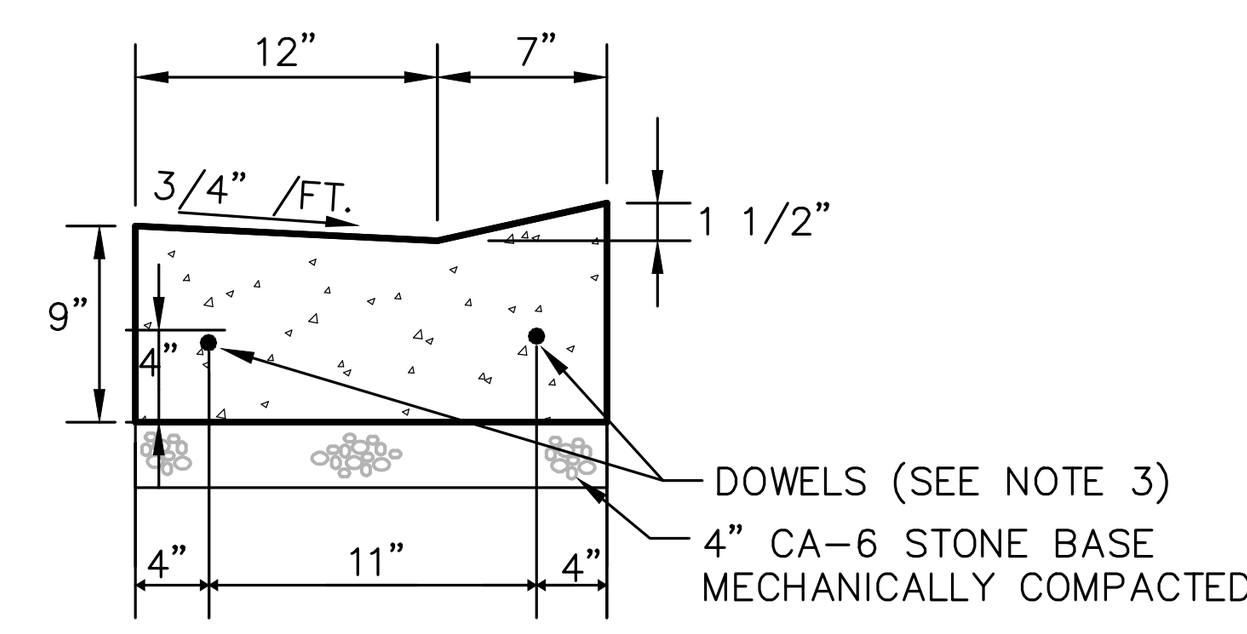

REGULAR DEPRESSED SECTION

02.01.2021

GEWALT HAMILTON ASSOCIATES, INC.

INLET FILTER BASKET DETAIL

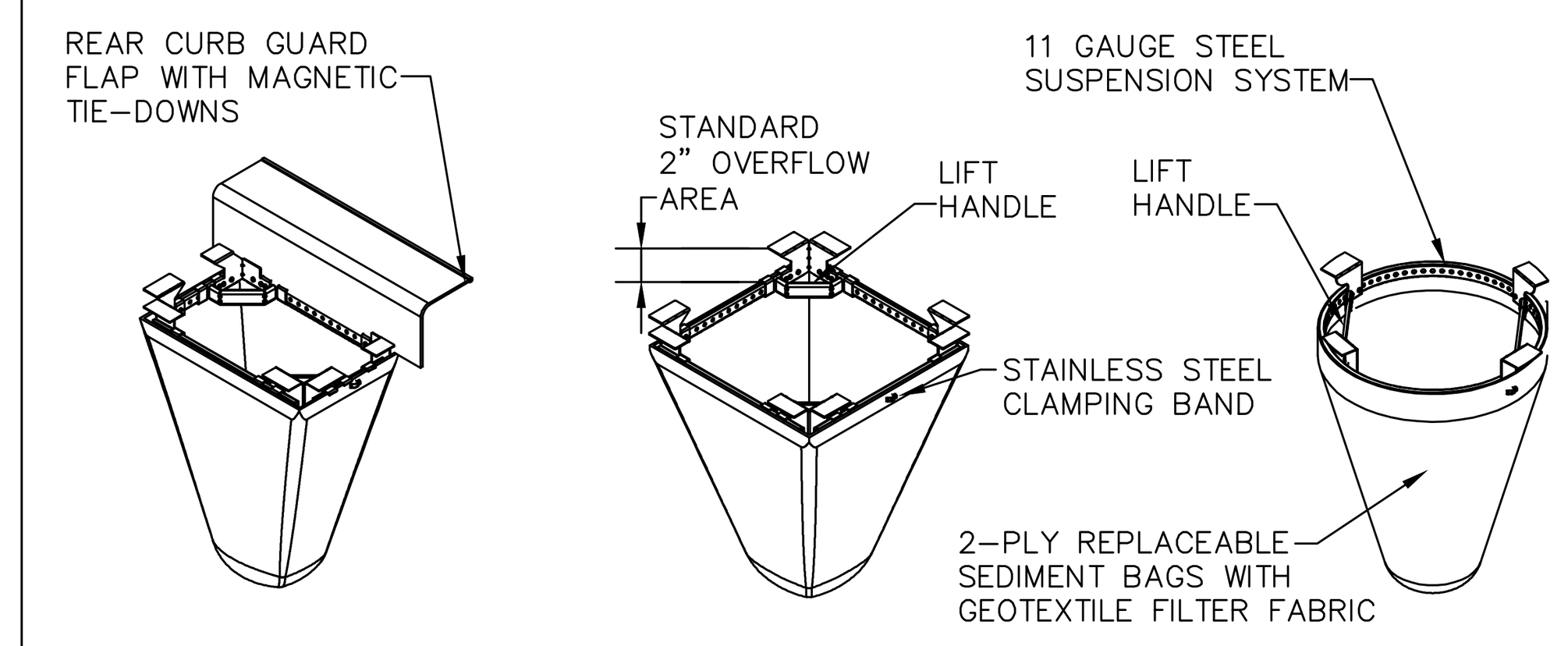

TYPICAL CURB BOX INLET FILTER

TYPICAL FLAT/RECTANGULAR/ROLLED CURB INLET FILTER

TYPICAL ROUND INLET FILTER

Material Property	Test Method	Value (min. ave.)	
> Inner Filter Bag Specs (2ft^{3}min vol)		Non-Woven	Woven Mono
Grab Tensile	ASTM D 4632	100 lbs	200 lbs
Puncture Strength	ASTM D 4833	65 lbs	90 lbs
Trapezoidal Tear	ASTM D 4535	45 lbs	75 lbs
UV Resistance	ASTM D 4355	70% at 500 hrs	90%
App Open Size (AOS)	ASTM D 4751	70 sieve (.212 mm)	40 sieve (.425 mm)
Premittivity	ASTM D 4491	2.0/sec.	2.1/sec
Water Flow Rate	ASTM D 4491	145 gpm/sqft.	145gpm/sqft
> Polyester Outer Reinforcement Bag Specifications			
Weight	ASTM D 3776	4.55 oz/sqyd +/-15%	
Thickness	ASTM D 1777	.040 +/- .005	
> Frame Construction			
A36 Structural Steel; 11 Gauge, Zinc Plated	ASTM A 576	Tensile Strength > 58,000 psi Yield Strength > 36,000 psi	

MAINTENANCE
1. CLEAN OUT AFTER EVERY RAIN EVENT

ACCEPTABLE MANUFACTURER'S AS LISTED BELOW:

1. INLET & PIPE PROTECTION, INC. Naperville, IL 60564 847 722-0690
2. MARATHON MATERIALS, INC. Plainfield, IL 60544 800-983-9493

03.15.2016

GEWALT HAMILTON ASSOCIATES, INC.

TREE PROTECTION FENCING DETAIL

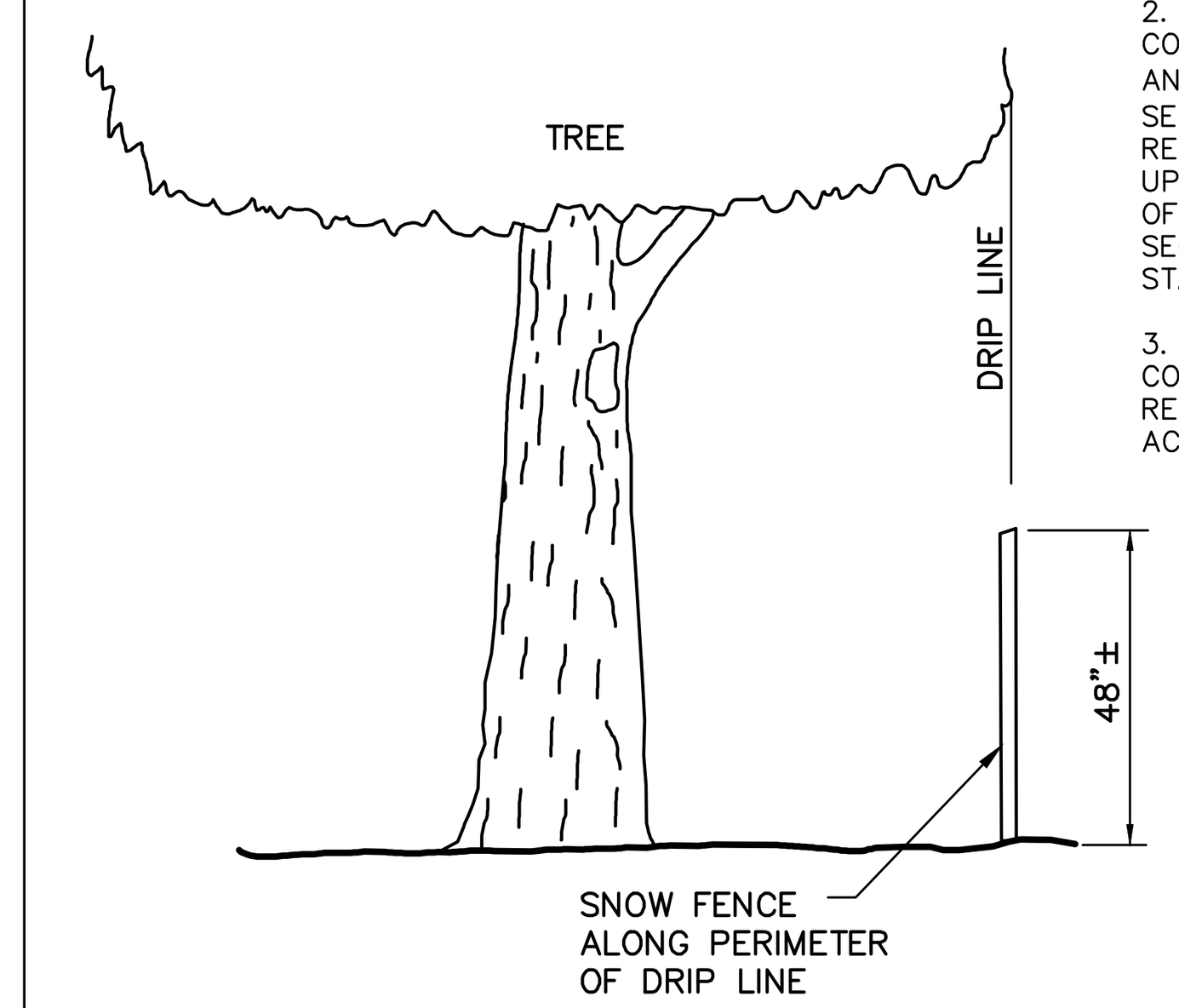

ELEVATION

NOTES:

1. EXISTING TREES TO BE PROTECTED SHALL HAVE SNOW FENCE INSTALLED AT THE DRIP LINE OF THE TREE TO PREVENT THE STOCKPILING OF EXCAVATED OR CONSTRUCTION MATERIALS UNDER THE TREE, AND PROHIBIT VEHICULAR TRAFFIC OR EXCESSIVE FOOT TRAFFIC WITHIN THE DRIP LINE.
2. SNOW FENCE SHALL BE WEBBED HDPE CONSTRUCTION FENCING, COLORED ORANGE AND SUPPORTED WITH STEEL "TEE" POSTS SET AT MAX. 15' INTERVALS, OR AS REQUIRED TO MAINTAIN THE FENCE IN AN UPRIGHT POSITION THROUGHOUT THE TERM OF CONSTRUCTION, IN CONFORMANCE WITH SECTION 201.05a OF THE HIGHWAY STANDARDS.
3. TREES THAT MAY BE DAMAGED BY CONSTRUCTION OPERATIONS SHALL BE REPAIRED OR REPLACED IN A MANNER ACCEPTABLE TO THE VILLAGE.

03.15.2016

GEWALT HAMILTON ASSOCIATES, INC.

WHEEL STOP

NOTES:

MATERIALS
1. WHEEL STOPS: PRECAST, 3.5% MINIMUM AIR-ENTRAINED CONCRETE; 4000 PSI MINIMUM COMPRESSIVE STRENGTH. EACH STOP SHALL BE REINFORCED WITH TWO NO.4 DEFORMED STEEL REINFORCING BARS, MINIMUM. PROVIDE CHAMFERED CORNERS AND DRAIN SLOTS ON UNDERSIDE, AND PROVIDE HOLES FOR DOWEL-ANCHORING TO SUBSTRATE.
2. ADHESIVE FOR ANCHORING STOPS TO PARKING STRUCTURE SLABS, AT-GRADE CONCRETE PAVEMENTS. EPOXY ADHESIVE MANUFACTURED FOR THE PURPOSE.
3. ADHESIVE FOR BONDING DOWEL TO WHEEL STOP: AS PROPOSED BY CONTRACTOR AND APPROVED BY ENGINEER, SUITABLE FOR APPLICATION.
4. STEEL BARS FOR INSTALLATION: GALVANIZED $\frac{5}{8}$" STEEL DOWELS OR GALVANIZED NO. 5 STEEL REINFORCING BARS.

INSTALLATION
5. WHEEL STOPS TO BE CENTERED IN WIDTH OF PARKING STALL.
6. SECURELY ATTACH WHEEL STOPS INTO AT-GRADE CONCRETE WITH NOT LESS THAN TWO GALVANIZED STEEL DOWELS EMBEDDED IN HOLES CAST INTO WHEEL STOPS. FIRMLY BOND EACH DOWEL TO WHEEL STOP AND TO PAVEMENT.
7. AT CONCRETE PAVEMENT, DRILL HOLES IN PAVEMENT FOR DOWELS.
8. AT PARKING STRUCTURE SLABS, EPOXY TO SLAB.

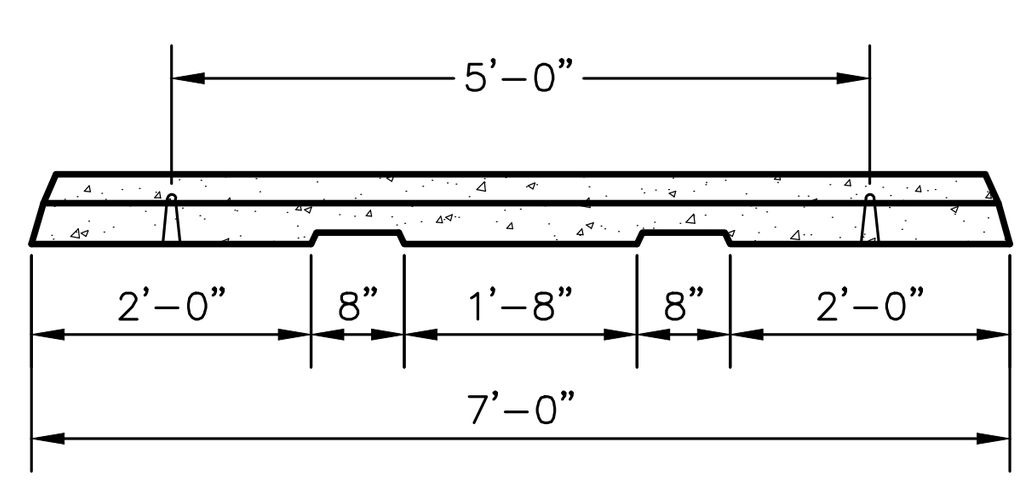

10.12.2018

GEWALT HAMILTON ASSOCIATES, INC.

CONCRETE WASHOUT

NOTES

1. ACTUAL LAYOUT DETERMINED IN FIELD.
2. THE CONCRETE WASHOUT SIGN SHALL BE INSTALLED WITHIN 30 FT. OF THE TEMPORARY CONCRETE WASHOUT FACILITY.
3. CONCRETE WASHOUT SHOULD NOT BE ALLOWED IN STREET OR TO REACH A STORM WATER DRAINAGE SYSTEM OR WATERCOURSE.
4. CONCRETE WASHOUT AREA TO BE LOCATED AT LEAST 10' BEHIND CURB IF ADJACENT TO A PAVED ROAD.
5. CONCRETE WASHOUT DUMPSTER MAY BE USED IN LIEU OF CONSTRUCTION ONE AS DETAILED.

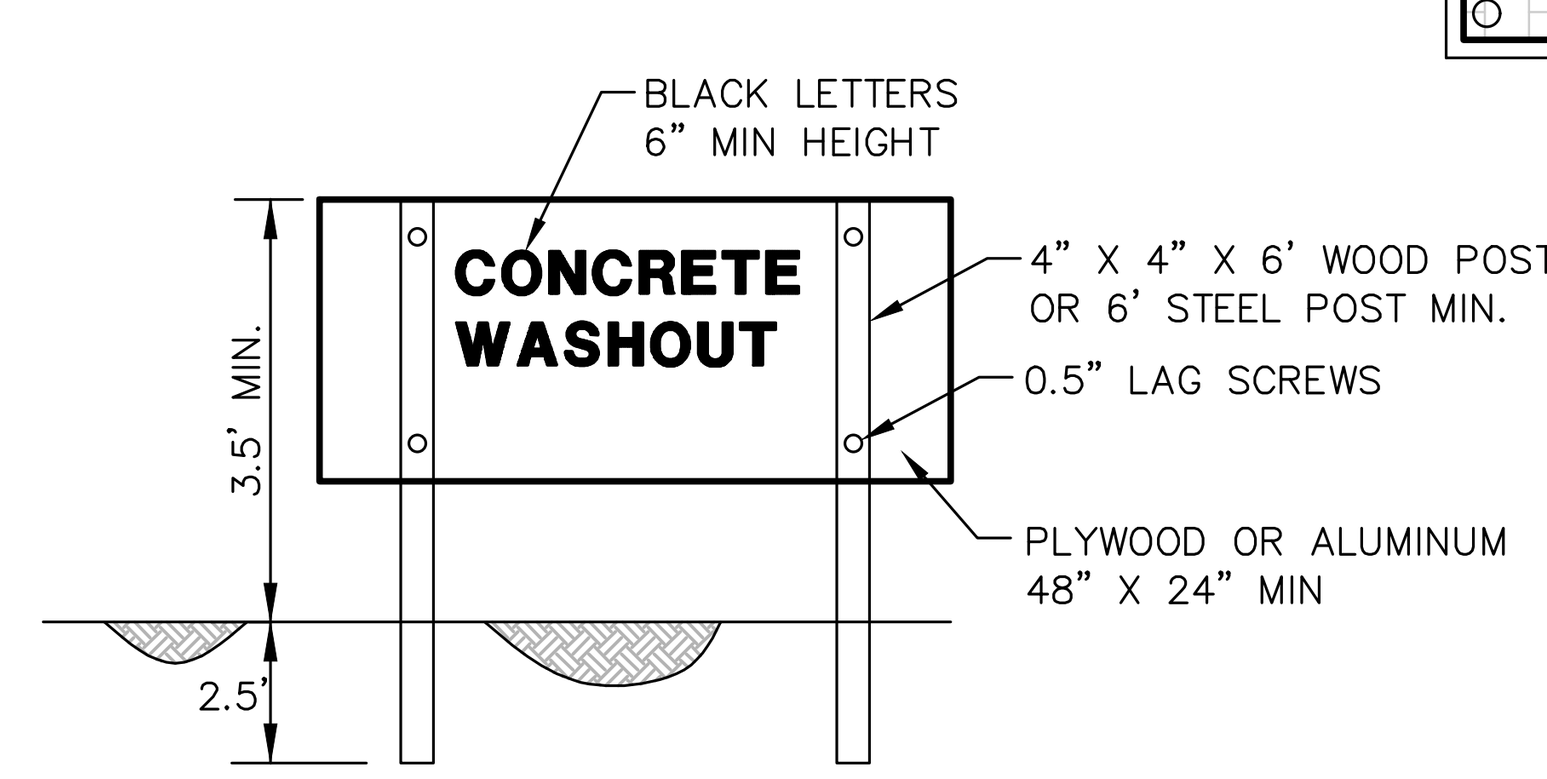

CONCRETE WASHOUT SIGN DETAIL (OR EQUIVALENT)

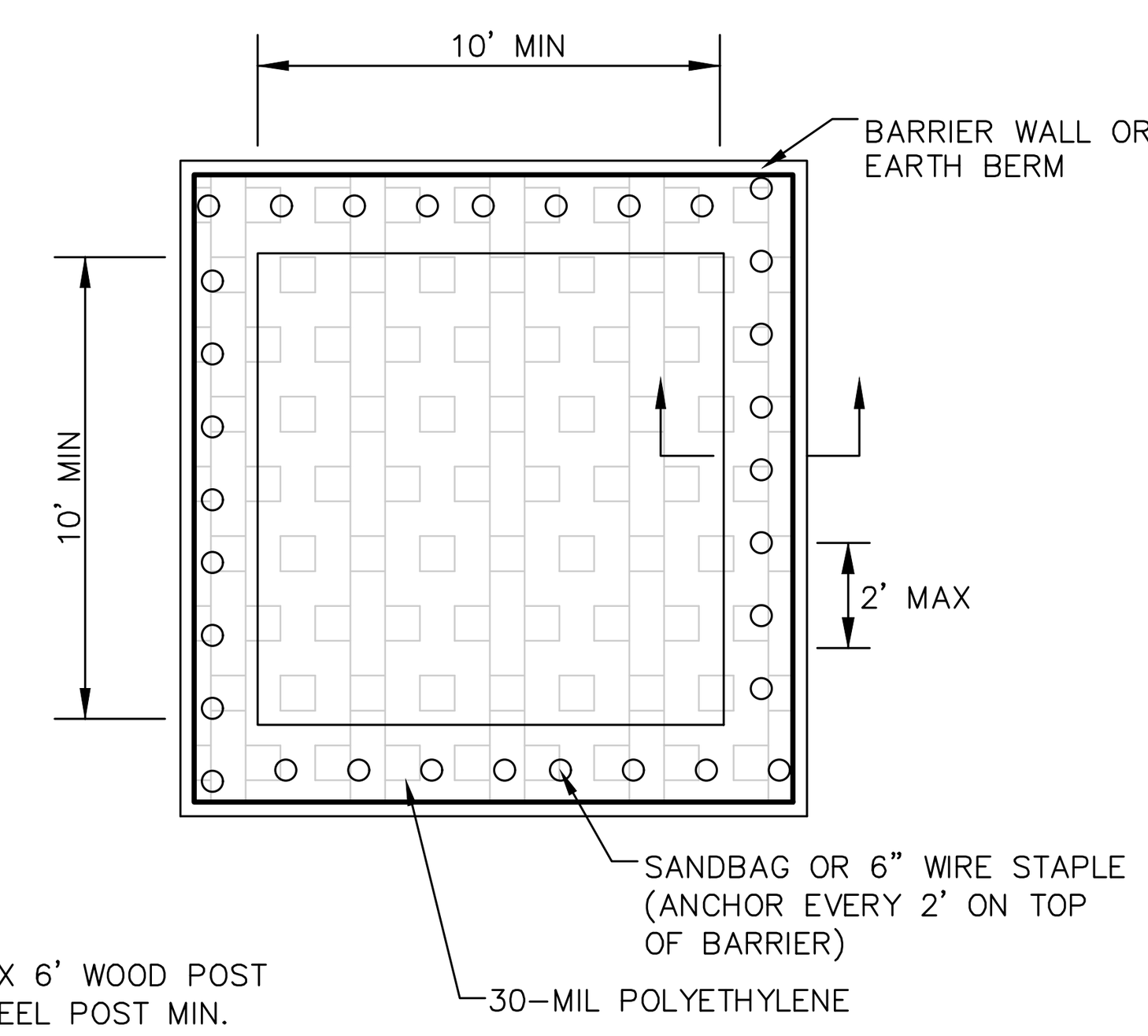

PLAN VIEW

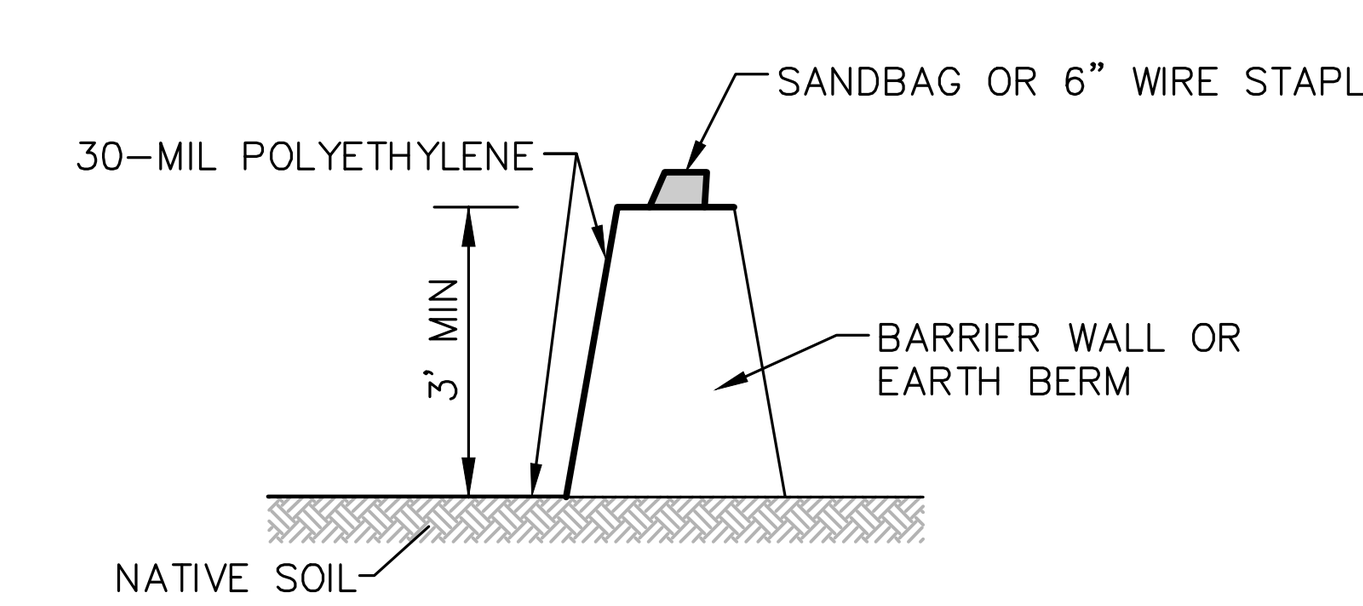

ABOVE GRADE ANCHOR SECTION

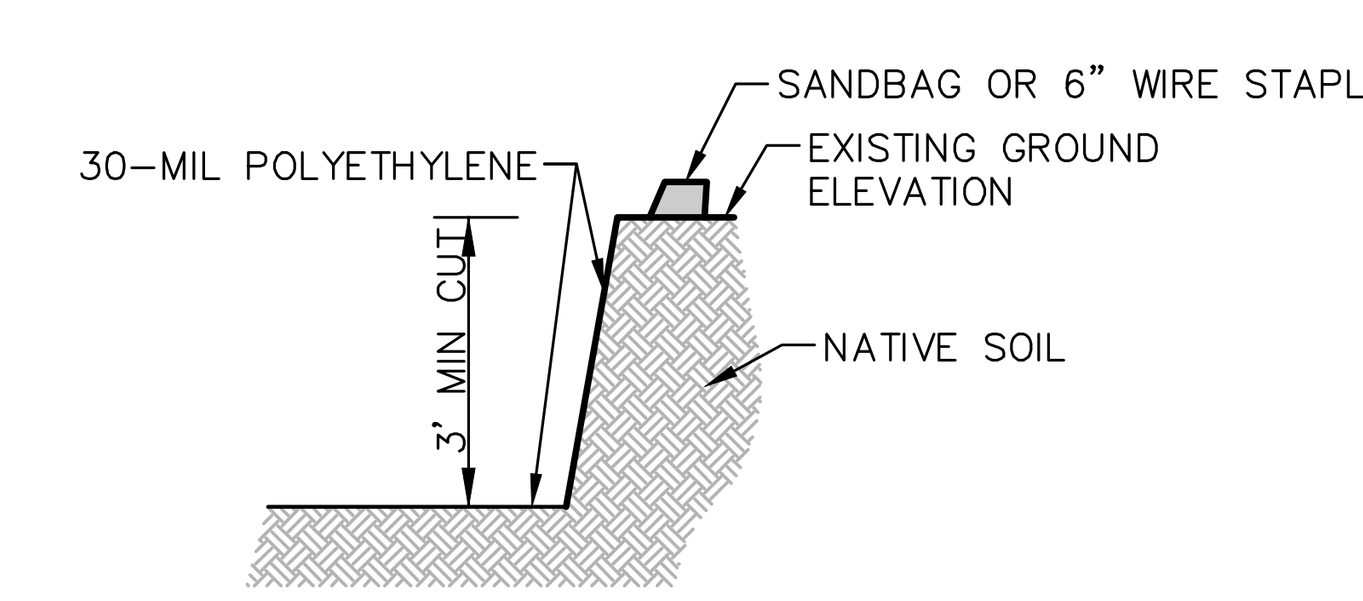

SUBGRADE ANCHOR SECTION

MAINTENANCE:

1. DRIED CONCRETE WASTE SHALL BE PICKED UP AND DISPOSED OF PROPERLY WHEN 75% OF CAPACITY IS REACHED.

08.14.2025

GEWALT HAMILTON ASSOCIATES, INC.

LOW PROFILE PRAIRIE SEED MIX

Species			Rate
Species	Common Name		PLS oz needed
(Grasses)			
Bouteloua curtipendula	Side-Oats Grama		16.00
Carex spp.	Prairie Sedge Species		4.00
Elymus canadensis	Canada Wild Rye		32.00
Koeleria macrantha	June Grass		1.00
Panicum virgatum	Switch Grass		1.00
Schizachyrium scoparium	Little Bluestem		36.00
		Total	**90.00**
Avena sativa	Common Oats		**512.00**
(Forbs)			
Amorpha canadensis	Lead Plant		0.50
Asclepias syriaca	Common Milkweed		2.00
Asclepias tuberosa	Butterfly Weed		2.00
Baptisia lactea	White Wild Indigo		2.00
Chamaecrista fasciculata	Partridge Pea		10.00
Coreopsis lanceolata	Sand Coreopsis		5.00
Dalea candida	White Prairie Clover		1.50
Dalea purpurea	Purple Prairie Clover		1.50
Desmanthus illinoensis	Illinois Sensitive Plant		3.00
Echinacea purpurea	Purple Coneflower		8.00
Eryngium yuccifolium	Rattlesnake Master		2.00
Lespedeza capitata	Round-Headed Bush Clover		2.00
Liatris aspera	Rough Blazing Star		0.50
Lupinus perennis v. occidentalis	Wild Lupine		3.00
Monarda fistulosa	Wild Bergamot		0.50
Oligoneuron rigidum	Stiff Goldenrod		1.00
Parthenium integrifolium	Wild Quinine		1.00
Penstemon digitalis	Foxglove Beard Tongue		0.50
Penstemon hirsutus	Hairy Beard Tongue		1.00
Ratibida pinnata	Yellow Coneflower		4.00
Rudbeckia hirta	Black-Eyed Susan		5.00
Ridbeckia subtomentosa	Sweet Black-Eyed Susan		1.00
Silphium laciniatum	Compass Plant		2.00
Solidago juncea	Early Goldenrod		0.25
Solidago speciosa	Showy Goldenrod		0.50
Symphyotrichum laeve	Smooth Blue Aster		1.00
Symphyotrichum novae-angliae	New England Aster		0.50
Symphyotrichum oolentangiense	Sky-Blue Aster		0.50
Tephrosia virginiana	Goat's Rue		1.00
Tradescentia ohiensis	Common Spiderwort		1.00
Verbena stricta	Hoary Vervain		1.00
Veronicastrum virginicum	Culver's Root		0.25

HMA RESURFACING DETAIL

NOTES:

1. THICKNESS VARIES

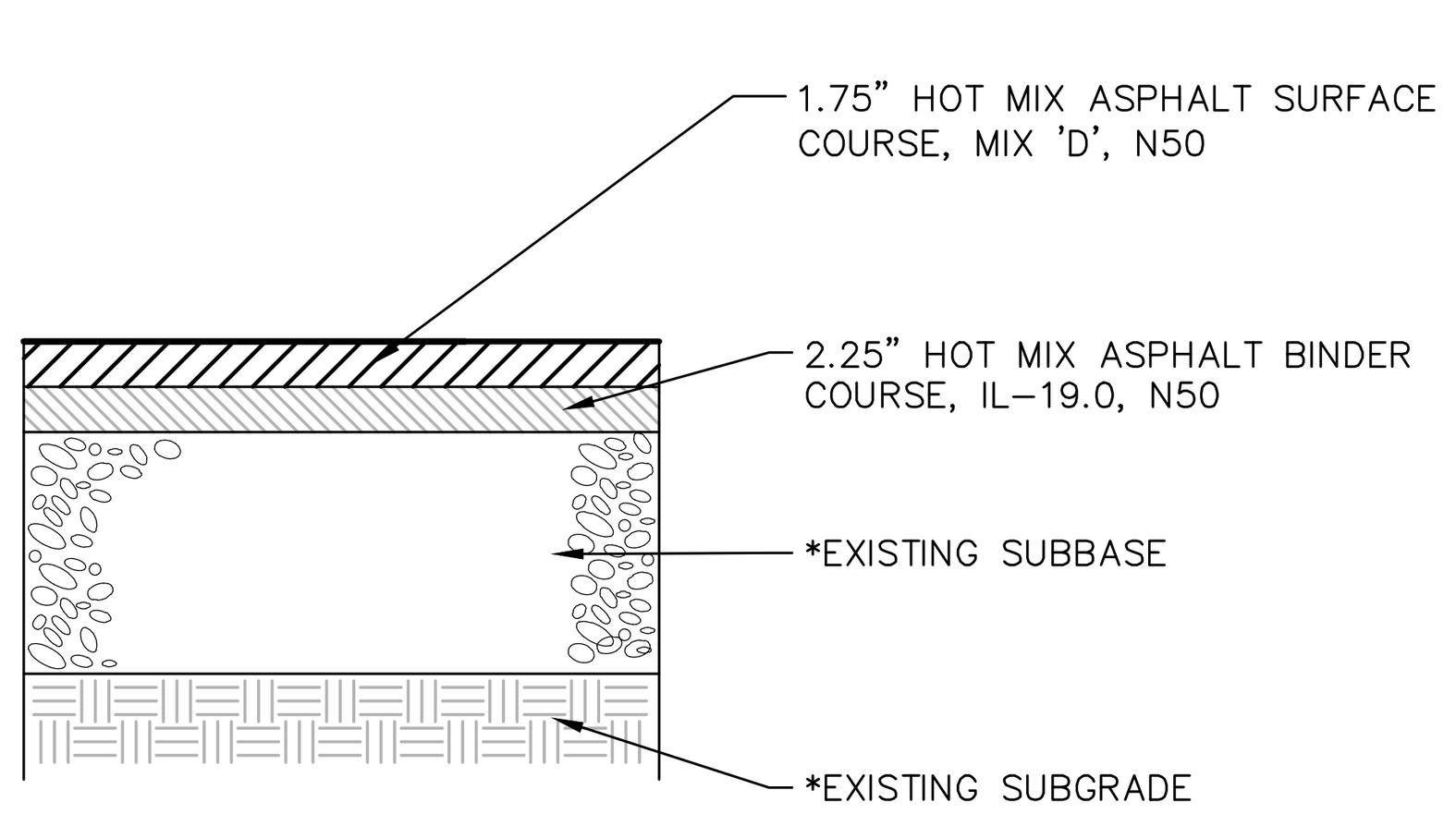

02.01.2021

GEWALT HAMILTON ASSOCIATES, INC.

SILT FENCE INSTALLATION DETAIL

NOTES:

1. SILT FENCE SHALL BE PLACED ON SLOPE CONTOURS TO MAXIMIZE PONDING EFFICIENCY.
2. INSPECT AND REPAIR FENCE AFTER EACH STORM EVENT AND REMOVE SEDIMENT WHEN NECESSARY. 9" (225mm) MAXIMUM RECOMMENDED STORAGE HEIGHT.
3. REMOVED SEDIMENT SHALL BE DEPOSITED TO AN AREA THAT WILL NOT CONTRIBUTE SEDIMENT OFF-SITE AND CAN BE PERMANENTLY STABILIZED.
4. FABRIC AND INSTALLATION SHALL MEET THE REQUIREMENTS OF ASSHTO STANDARD SPECIFICATION M-288-00.
5. SLICING METHOD IS PREFERRED.

PROPERTY	TEST PROCEDURE	
Grab Elongation		
Machine Direction	ASTM D-4533	123 lbs
X-Machine Direction	ASTM D-4833	101 lbs
Permittivity	ASTM D-4491	0.05 sec^{-1}
A.S.O.	ASTM D-4751	30 u.s. Sieve
UV Stability	ASTM D-4355	70%

1. SET POSTS AND EXCAVATE OR SLIT-TRENCH A 6-INCH DEEP TRENCH UPSLOPE ALONG THE LINE OF THE POST
2. ATTACH AASHTO GEOTEXTILE FILTER FABRIC TO EACH POST WITH A MINIMUM OF 3(THREE) FASTENERS PER POST AND EXTEND TO THE BOTTOM OF THE TRENCH. ACCEPTABLE FASTENERS INCLUDE STAPLES, ZIP-TIES, OR WIRE TIES.
3. BACKFILL AND COMPACT THE EXCAVATED SPOIL MATERIALS

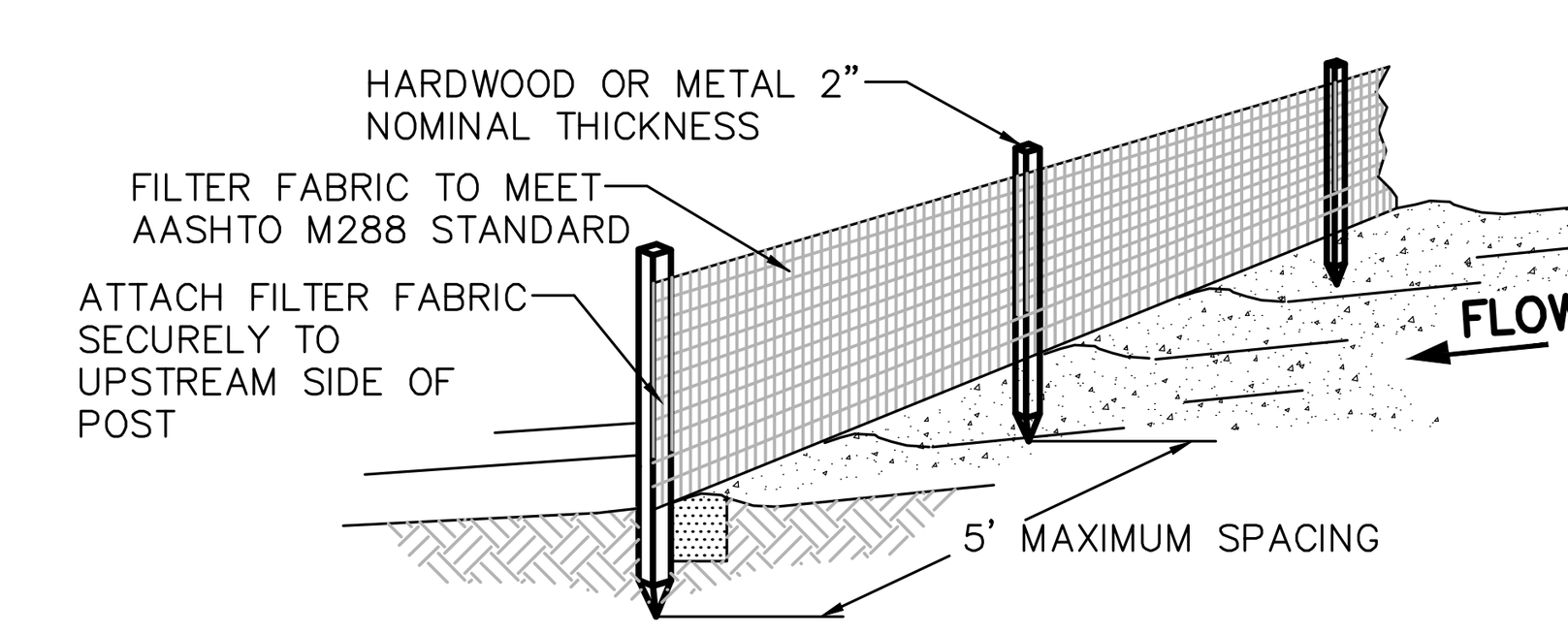

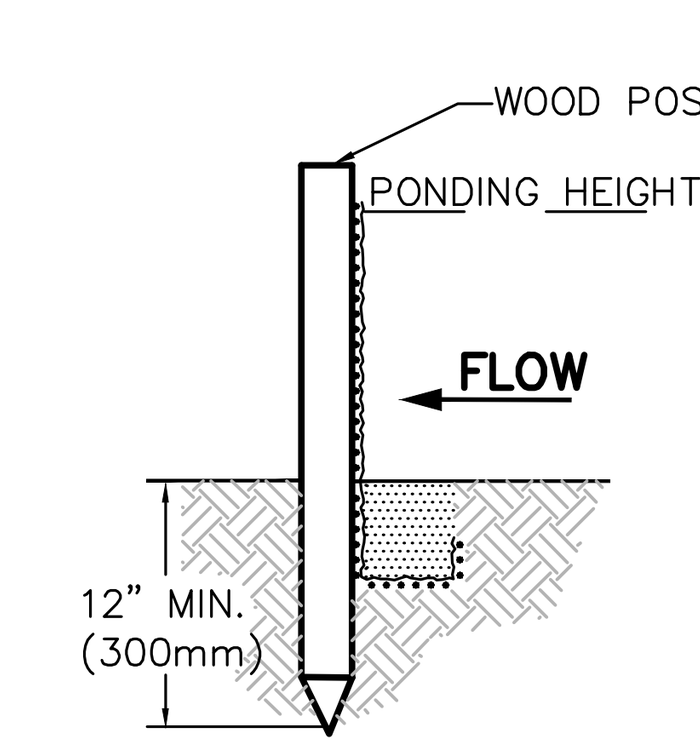

TRENCH INSTALLATION

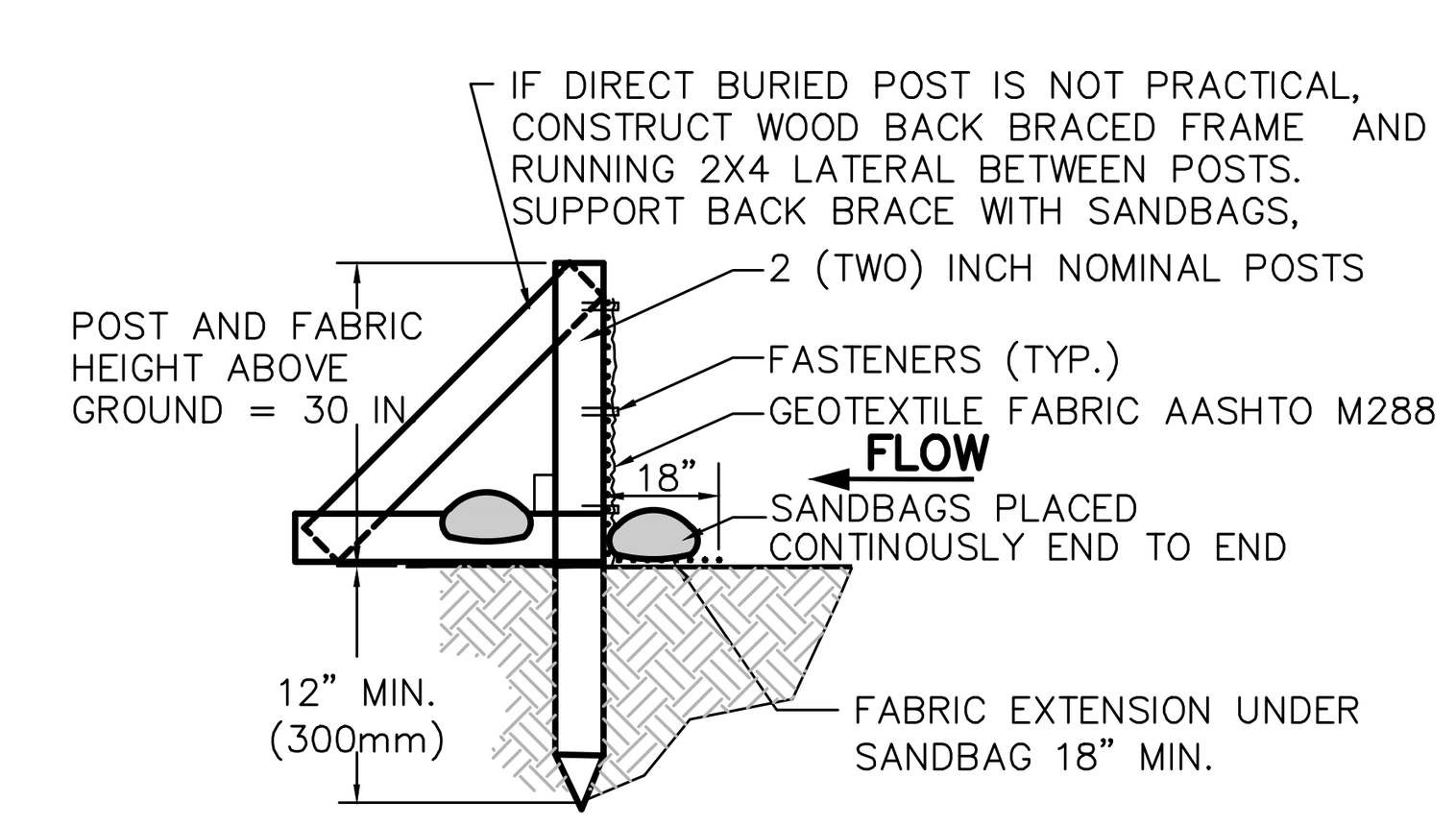

INSTALLATION WITHOUT TRENCHING

03.15.2016

GEWALT HAMILTON ASSOCIATES, INC.

GEWALT HAMILTON ASSOCIATES, INC.
625 Forest Edge Drive ▪ Vernon Hills, IL. 60061
TEL 847.478.9700 ▪ FAX 847.478.9701

COPYRIGHT NOTICE
This drawing is the property of Gewalt-Hamilton Assoc., Inc. and is not to be used for any purpose other than the specific project and site named herein, and cannot be reproduced in any manner without the express written permission from Gewalt-Hamilton Associates, Inc.

DETAILS

PARKING LOT RENOVATIONS
FIRST UNITED METHODIST CHURCH OF ARLINGTON HEIGHTS
1903 E EUCLID AVENUE, ARLINGTON HEIGHTS, IL 60004

NO.	BY	DATE	REVISION	NO.	BY	DATE	REVISION

FILE: 6195.000-DT.dwg
DRAWN BY: JMB
DATE: 03.09.2026
GHA PROJECT # 6195.000
CHECKED BY: MGFC
DATE: 03.09.2026
SCALE: N.A.
SHEET NUMBER: 8
OF 8 SHEETS

G:\6100\6195.000 FUMCAH PARKING LOT\6195.000-DT.DWG 3/9/2026 7:27 PM

TECHNICAL MEMORANDUM

DATE: December 23, 2025

TO: Mr. Dan Buntley
Trustee
First United Methodist Church of Arlington Heights

FROM: Jennfer Jones, PE, RSP
PE License #062-052065

SUBJECT: Parking Study
First United Methodist Church of Arlington Heights
Arlington Heights, Illinois

INTRODUCTION

First United Methodist Church of Arlington Heights (FUMCAH) is in the process of re-paving a portion of their existing parking lot which will result in a change in the number of parking spaces currently available on the site. This memorandum summarizes the results of a parking analysis completed for the proposed changes which will result in a total of 235 available parking spaces. Figure 1 illustrates the proposed concept plan.

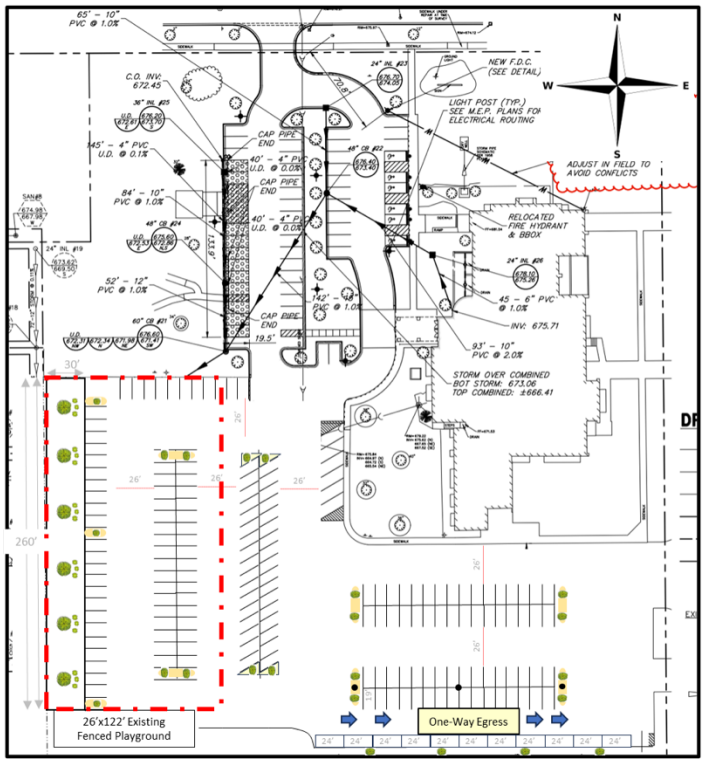

Figure 1: FUMCAH Parking Lot Concept Plan

VILLAGE REQUIREMENTS

Table 1 summarizes the number of parking spaces required according to the Village of Arlington Heights' Ordinance No. 2024-71, Section 10.4-4.

Table 1: Parking Space Requirements by Use

Use	Required Parking Ratio	Corresponding Size	Required Number of Parking Spaces
Sanctuary	One Space/5 Seats	426 Seats	85
Office/Administration	One Space/300 SF	4,146 SF	14
Multi-Purpose	30% of Occupancy	200 people	60
Pre-School	One Space/Employee + One Space/5 Classrooms	18 Employees/5 Classrooms	19
Total Required			119
Total Proposed			235

If all of these uses were utilized at the same time, the total proposed parking spaces of 235 far exceeds the number of required spaces per the Village Ordinance. However, the Pre-School classrooms and the sanctuary are intentionally not used at the same time.

PARKING SURVEY

A survey of the existing parking space usage was conducted on Sundays from August 4, 2024 through August 3, 2025. After the 9:30am service started on each of these Sundays, the number of vehicles parked in the church parking lot were counted. Figure 2 summarizes the results of that survey.

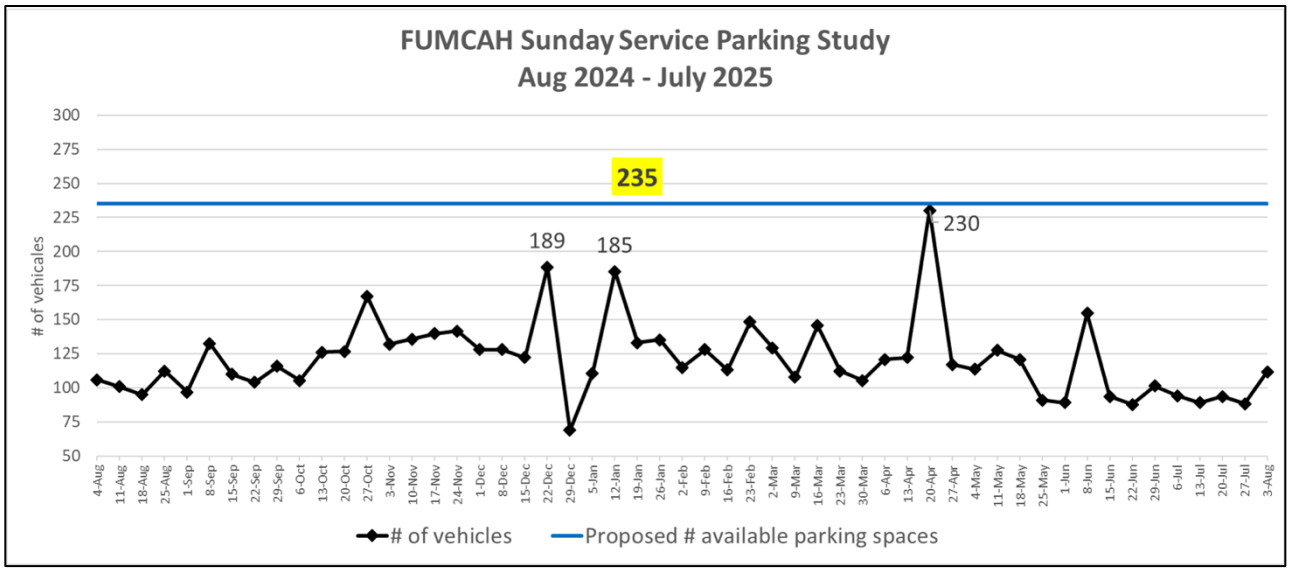

Figure 2: Graph of Parked Vehicles from August 4, 2024 through August 3, 2025

Over the entire year, the average number of parking spaces utilized on Sunday mornings was 121 parked vehicles which is just over 50% of the proposed capacity. Three Sundays of the year experienced peak usage: Christmas, MLK Sunday, and Easter. These peak Sundays did not exceed the proposed parking capacity of 235 parking spaces.

Additional parking surveys were completed on several weekdays and a Saturday in 2025 from 7:00am to 9:00pm to evaluate parking usage outside of Sunday mornings. Parking utilization was evaluated from video recordings of the parking lot. Table 2 summarizes the results of these surveys with the highest number of parked vehicles from each day highlighted.

Table 2: Parking Space Usage on Non-Sundays

Hour Beginning	Number of Parked Vehicles				
	Pre-School Normal Session Thursday, May 15	No Special Events Tuesday June 17	Children's Performances and Funeral Friday, July 18	Children's Performances Friday, July 25	No Special Events Saturday August 2
7:00 AM	1	5	3	0	2
8:00 AM	7	7	15	0	4
9:00 AM	23	10	32	6	12
10:00 AM	26	9	46	1	9
11:00 AM	23	8	55	0	0
12:00 PM	25	7	47	0	2
1:00 PM	18	7	30	5	1
2:00 PM	9	5	16	4	1
3:00 PM	8	9	4	7	0
4:00 PM	3	6	7	7	0
5:00 PM	0	5	57	49	0
6:00 PM	0	13	69	2	0
7:00 PM	0	18	1	0	0
8:00 PM	0	1	0	0	0

The proposed capacity of 235 parking spaces greatly exceeds the parking utilization on non-Sundays.

CONCLUSION

The proposed parking capacity of 235 parking spaces exceeds the Village of Arlington Heights parking requirements and is sufficient to meet the parking demand of the church.

Suggested Motion for Village Board Meeting – 5/4/2026

X.F. 1903 E. Euclid Avenue – First United Methodist Church

Trustee _____moved to approve the final documents granting the zoning relief for consideration at this Board meeting for PC25-025, variances from Chapter 28, Sections 5.1-3.3(b), Section 10.2-12.4, and Section 10.4-4, and subject to the recommended conditions, all as set forth in the agenda materials for tonight's Board Meeting.

Trustee _____ seconded.

VILLAGE OF ARLINGTON HEIGHTS
INC. 1887

Village Board of Trustees
5/4/2026

Item: Discussion of Pool Attendant Requirements
Department: Health & Human Services

Item Description:

Background

The Village has received a request from Regent Park Property Owners Association to amend/eliminate ordinance language, chapter 19-402, requiring a pool attendant present any time a swimming pool is in use, except in the instance of a family pool and indoor pools. New multi-unit housing developments have also raised questions regarding the required pool attendant in Arlington Heights. Regent Park is requesting the change to allow their pool to be used with a "swim at your own risk" policy. All of our neighboring communities currently have a" swim at your own risk" policy and such policies are allowable by County and State regulations. The requested change would not impact inspections, sanitation or health safety standards.

Research

The pool attendant language dates back to September 8, 1986, nearly 40 years ago. Since that time, neighboring communities that had similar ordinances have removed the requirement and follow county and state regulations for pool safety and sanitation, which the Village has adopted by reference. In the past several years, the requirement for a pool attendant has been questioned by property owners' associations and multi-family communities with outdoor pools.

Level of Service Impact

Minimal.

Budget Impact

N/A

Options to Consider

1. Continue status quo of required pool attendant language with definition.

    a. May increase pool use safety.
    b. Provides ease of access for inspections.
    c. Increases costs for private and community pools.

d. Pool attendant staffing constraints may limit pool use.

2. Amend ordinance to remove the pool attendant requirement.
   a. Allows community and private/semi private outdoor pools to increase hours and decrease costs.
   b. Aligns with neighboring community policies.
   c. May decrease pool safety.

Recommendation / Next Steps
Staff recommends that the Village Board direct Staff to draft an ordinance that eliminates the pool attendant requirement for consideration at the May 18, 2026 Village Board meeting.

ATTACHMENTS:
1. chapter 19; swimming pools

AN ORDINANCE AMENDING CHAPTER 19 OF THE MUNICIPAL CODE OF ARLINGTON HEIGHTS, 1965 WITH RESPECT TO SWIMMING POOLS

BE IN ORDAINED BY THE PRESIDENT AND BOARD OF TRUSTEES OF THE VILLAGE OF ARLINGTON HEIGHTS:

SECTION ONE: That Section 19-505 of the Municipal Code of Arlington Heights, pertaining to safety regulations for swimming pools, is hereby amended by deleting subsection (a) and by substituting in lieu thereof the following new subsection:

(a) Pool attendant. A pool attendant shall be present any time a swimming pool is in use, except in the instance of a family pool and indoor hotel and motel pools. Such attendant shall enforce all regulations pertaining to minimum sanitary requirements and operation of swimming pools referenced in Section 19-509.

SECTION TWO: This ordinance shall be in full force and effect from and after its passage, approval, and publication in pamphlet form, in the manner provided by law.

AYES: PALMATIER, BUSS, WALTON, MAKI, WALSH, JOLLY, AGRAN, DUFFY

NAYS: NONE

PASSED AND APPROVED this 8th day of September, 1986.

Edward [illegible]
Village President
PRO TEM

ATTEST:

[illegible]
Village Clerk

86-122

86-122